Calma

nurus

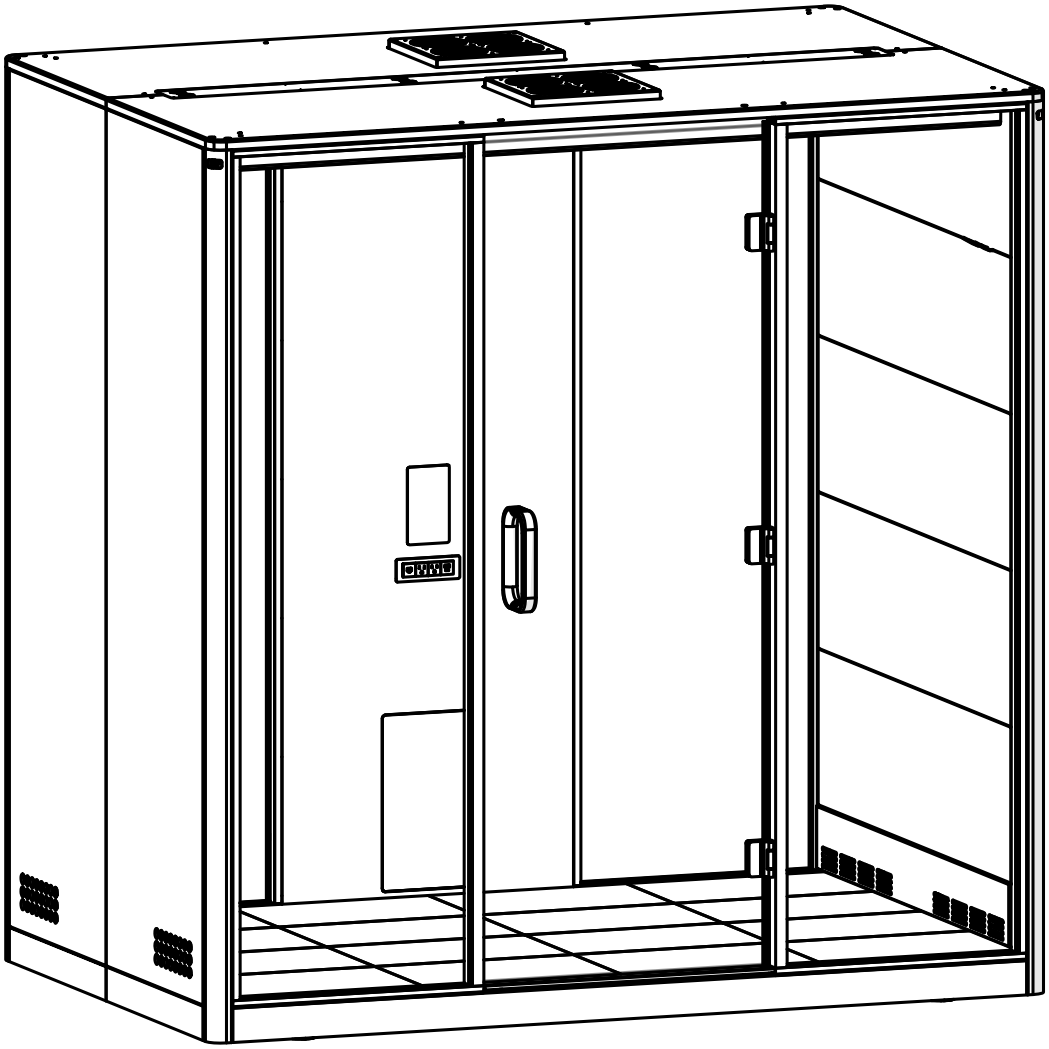

LARGE

Installation Manual
Made in Türkiye

Contents

1.0 – Preface .4

- **1.1** – Manual Contents .4
- **1.2** – Product Information .4
- **1.3** – Intended Use .4
- **1.4** – Non-conventional Use .5
- **1.5** – Warning, safety, and information symbols in this manual .5
- **1.6** – Main safety risks to the installation, maintenence, disassembly, and use of the product .6

2.0 – Placement of Markings .9

3.0 – Packaging Information and Sub-Layers .11

4.0 – Required Tools for Installation .12

5.0 – Main Dimensions .13

- **5.1** – Required Working Space .14

6.0 – Components .15

7.0 – Seismic Anchoring (optional) .18

8.0 – Power Inlet Direction .21

9.0 – Begin Installation .24

10.0 – In Case you Need to Change Calma's Location .57

11.0 – In Case you Need to Adjust the Hinges .59

12.0 – Installing the Fixed Table .65

13.0 – Installing the Earthing Cable .66

DO NOT THROW AWAY THIS MANUAL.

Important Safety and Product Information

1.0 - Preface

This installation manual provides a detailed description on how to install the Calma Small. Each person that will use the Calma Small should read and be aware of the dangers and warnings highlighted in the installation manual to achieve maximum safety during the usage of the pod.

This manual contains all the necessary information to correctly use the Calma pod.

All product information, user and installation manuals can be found on our website:
www.calma.nurus.com

1.1 - Manual Contents

This installation manual contains general information about :

- Instructions on how to install the Calma pod.
- Safety information
- Guidelines on the purpose and content of the instructions.

1.2 - Product Information

The information in this manual reflects the product at the time of delivery. All details provided are accurate as of the publication date.

1.3 - Intended Use

The Calma Small intendedended for interior use in commercial spaces to be used by one person at a time only.

Warning:

WARNING - To prevent burns, fire, electric shock, or injury, only use the product as intended and avoid using accessories not approved by the manufacturer

1.4 - Non-conventional Use

Any product use or maintenance not specifically authorized in the installation, maintenance or maintenence; forbidden. This includes:

- Installing, maintaining, or disassembling the pod without fully understanding the provided instructions.
- Using the pod beyond its specified limits
- Modifying or changing the structure of the pod
- Using the pod despite visible defects or damage
- Using the pod outdoors or in unsafe temperature or air quality conditions
- Climbing on or placing heavy objects on the roof of the product
- Smoking inside the pod

1.4.1 - Operating Conditions

The pod is designed to function under the following conditions:

- Temperature range: +15°C to +30°C (59°F to 86°F)
- Maximum humidity: 50%
- Adequate air quality around the product

1.5 - Warning, safety and information symbols in this manual

The warnings in this manual are categorized as follows:

- The term "**DANGER**" signifies a hazardous situation that, if not avoided, will lead to death or serious injury.
- The term "**WARNING**" refers to a hazardous situation that, if not avoided, could lead to death or injury.

The safety symbols in this manual may also appear on the product. Anyone involved in installation, disassembly, maintenance, or use of the product must be familiar with and follow all safety symbols, labels, and instructions for the tasks they are performing.

Table 1: Hazard

	The symbol of an exclamation mark within a colored triangle signifies a dangerous situation.

Table 2: Mandatory

	A white symbol within a colored circle signifies an action that needs to be taken to prevent a hazardous situation.

Table 3: Prohibited Action

	A circle with a diagonal line shows an action that is prohibited.

1.6 - Main safety risks to the installation, maintenence, disassembly and use of the product

1.6.1: Installation, maintenence, and disassembly

	WARNING! To prevent burns, fire, electric shocks, or injuries, follow these safety instructions:
	Wear cut-resistant gloves when installing, maintaining, or taking apart the product.
	Wear steel-toed boots while performing installation, maintenance, or disassembly of the product.
	Be sure to read and fully understand the instructions and plan your task ahead of time.
	Follow all local workplace safety rules and regulations
	Keep the work area clean and free from clutter during installation, maintenance, or disassembly.
	Do not climb on top of the product or place any load on the roof of the product.
	When moving the pod, ensure that the Calma Small is on its casters to move around easily. Do not move the Calma Small without ensuring the casters are on the ground.

	Do not use the product if the ventilation is not working.
	Do not use the product if the ventilation channels are blocked. Ensure the channels are clear of lint, hair, and similar obstructions.
	If you observe any electrical defects or the product isn't functioning correctly, unplug it and contact the dealer or manufacturer immediately.
	Do not insert or drop anything into any opening unless you are specifically instructed to do so.
	The product is not intended for outdoor use.
	Do not use aerosol (spray) products where there is no oxygen supply
	Do not climb on top of the product or place any load on the roof of the product.
	Do not lean on the pod.
	Do not smoke inside the pod.
	Do not block the view through the front and back glass panels by adding signs, decorations, or installing blinds that prevent people from seeing inside in case of emergencies.
	DANGER! When cleaning and doing maintenence on the Calma, ensure that the power cord is disconnected from the power outlet to avoid electric shock.
	ATTENTION! The Calma will only work with a 100-120 V AC circuit which has a grounding prong. Do not use an adapter with this product otherwise it could affect the function of the pod. Pay attention that the power cord is plugged into a socket which has a grounding prong inlet like the one shown below. 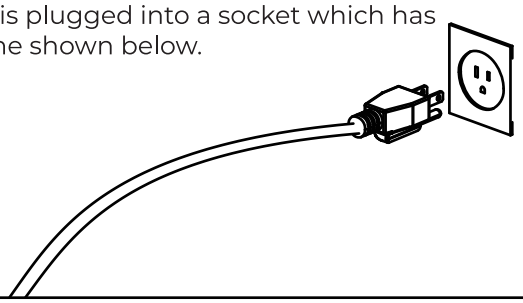

1.6.2: Moving the product on casters

	WARNING! The product is very heavy. Moving the product on the casters requires planning and care. Make sure the product cannot tip over while moving.
	Only move the product on even surfaces: no crack or thresholds over 3mm (1/8in) on the intended route.
	When moving the product, only push below the vertical middle. Do not tow the product.
	Do not enter the product if it is standing on the casters. It is only allowed to use the casters for moving the product. Return the full weight of the product onto the leveling feet immediately after relocation and level the floor.

2.0 – Marking Placements and Labels

Ceiling unit

Input: Input:12 -24V DC (2A MAX)

Model: CALMA LARGE

Rev. 3.1

S/N

Calma
nurus

FOR U.S. AND CANADA ONLY

WARNING! - Fire and electric shock risk!
Use only SJT type 14 AWG power cord.

L'AVERTISSEMENT - Risque d'incendie et de choc électrique, Utiliser uniquement un cordon d'alimentation 14 AWG.

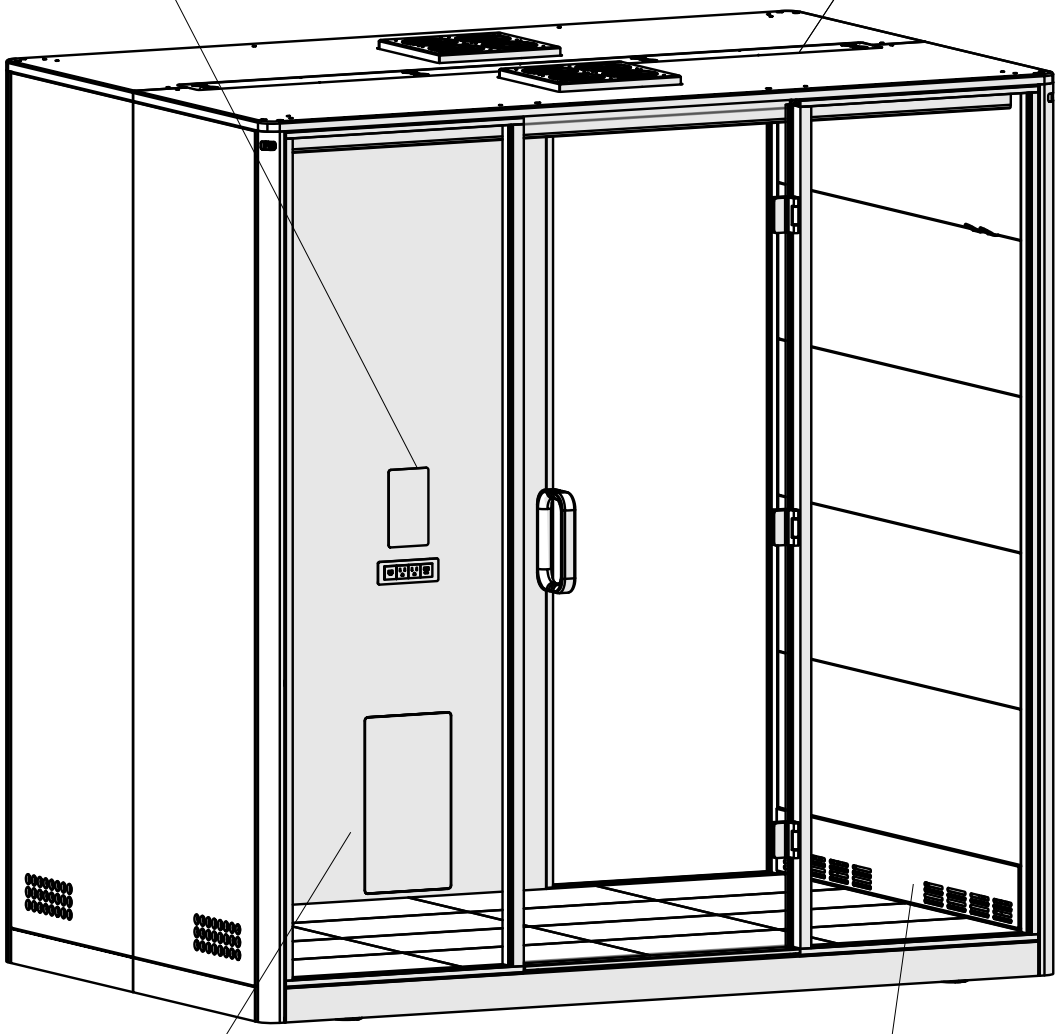

WARNING!

RISK OF INJURY
Do not use in areas where children or individuals with cognitive disabilities are expected to be present without supervision

L'AVERTISSEMENT,

RISQUE DE BLESSEURE,
Ne pas utiliser ces cabines dans des lieux susceptibles d'accuelir des enfants ou des adultes souffrant de troubles cognitifs sans surveillance.

Calma
nurus

Manufacturer/Fabricant: NURUS
Web: calma.nurus.com
Email: info@nurus.com.tr
Oğuz Caddesi no. 25 Sincan/ANKARA

Manufacture date /
Date de Fabrication

Product / Produit
Input / Entreé

CALMA XLARGE
Input: 100-240V AC (8A) 50/60 Hz

Attention!
Ensure the product is properly connected to a grounded outlet to prevent the hazard of fire or electric shock.

Attention!
Branchez toujours le produit dans une prise relieé a la terre pour éviter tout risque d'incedile ou choc électrique.

Position	Label	Label Text
1.	**Ceiling unit** Input: Input:12 -24V DC (2A MAX) Model: CALMA LARGE Rev. 3.1 S/N Calma nurus	**Ceiling unit** Input: 12 - 24V DC (2A MAX) Model: CALMA LARGE Rev. 3.1 S/N
2.	**WARNING!** **Risk of injury** Maximum table load 110 lbs /50 kg **L'AVERTISSEMENT** **Risque de blessure** Poids maximal autorisé 110lbs /50 kg	**WARNING!** **Risk of injury** Maximum table load 110 lbs /50 kg **L'AVERTISSEMENT** **Risque de blessure** Poids maximal autorisé 110lbs /50 kg
3.	**WARNING!** **RISK OF INJURY** Do not use in areas where children or individuals with cognitive disabilities are expected to be present without supervision **L'AVERTISSEMENT,** **RISQUE DE BLESSEURE,** Ne pas utiliser ces cabines dans des lieux susceptibles d'accuelir des enfants ou des adultes souffrant de troubles cognitifs sans surveillance.	**WARNING!** **RISK OF INJURY** Do not use in areas where children or individuals with cognitive disabilities are expected to be present without supervision. **L'AVERTISSEMENT,** **RISQUE DE BLESSEURE,** Ne pas utiliser ces cabines dans des lieux susceptibles d'accuelir des enfants ou des adultes souffrant de troubles cognitifs sans surveillance.
4.	FOR U.S. AND CANADA ONLY **WARNING! - Fire and electric shock risk!** Use only SJT type 14 AWG power cord. **L'AVERTISSEMENT - Risque d'incendie et de choc électrique**, Utiliser uniquement un cordon d'alimentation 14 AWG.	FOR U.S. AND CANADA ONLY **WARNING! - Fire and electric shock risk!** Use only SJT type 14 AWG power cord. **L'AVERTISSEMENT - Risque d'incendie et de choc électrique**, Utiliser uniquement un cordon d'alimentation 14 AWG.
5.	Calma nurus Manufacturer/Fabricant: NURUS Web: calma.nurus.com Email: info@nurus.com.tr Oğuz Caddesi no. 25 Sincan/ANKARA Manufacture date / Date de Fabrication Product / Produit Input / Entreé CALMA LARGE Input: 100-240V AC (8A) 50/60 Hz Attention! Ensure the product is properly connected to a grounded outlet to prevent the hazard of fire or electric shock. Attention! Branchez toujours le produit dans une prise relieé a la terre pour éviter tout risque d'incedile ou choc électtrique.	**Manufacturer/Fabricant: NURUS** **Web: calma.nurus.com** **Email: info@nurus.com.tr** **Oğuz Caddesi no. 25 Sincan/ANKARA** **Manufacture date /** **Date de Fabrication** **Product / Produit** **Input / Entreé** **Attention!** **Ensure the product is properly connected to a grounded outlet to prevent the hazard of fire or electric shock.** **Attention!** **Branchez toujours le produit dans une prise relieé a la terre pour éviter tout risque d'incedile ou choc électtrique.** **Input 100-240V AC (8A) 50-60 Hz**

4.0 – Required Tools for Installation

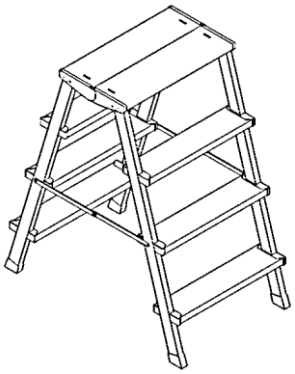

LADDER
(4 steps, h: 82,5)

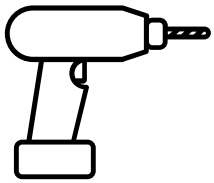

POWER TOOL

ALLEN
(2,5 / 3 / 4 / 5 / 6 mm)

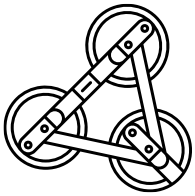

SUCTION
CUPS

* (If you install the handle before inserting the magnets, the suction cups will not be necessary.)

PHILLIPS
DRILL BIT

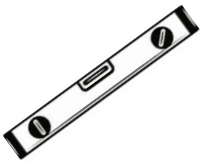

LEVEL

* Power tool, allen keys, hex socket, level tool and ladder are not included.

5.0 – Main Dimensions

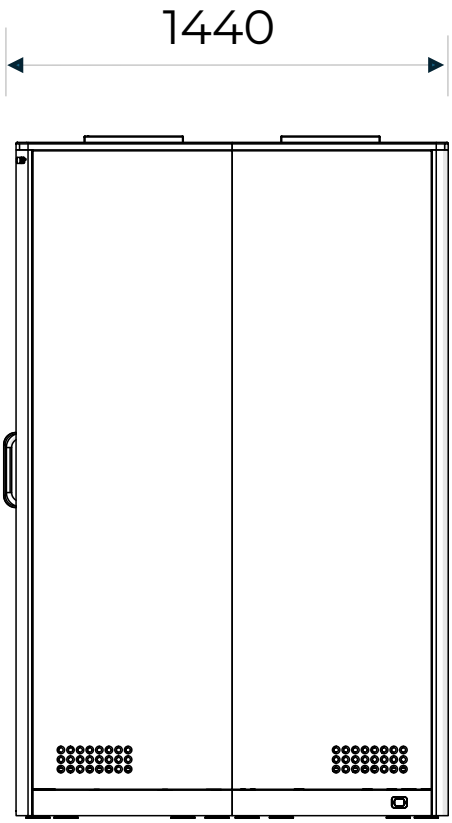

Right Side

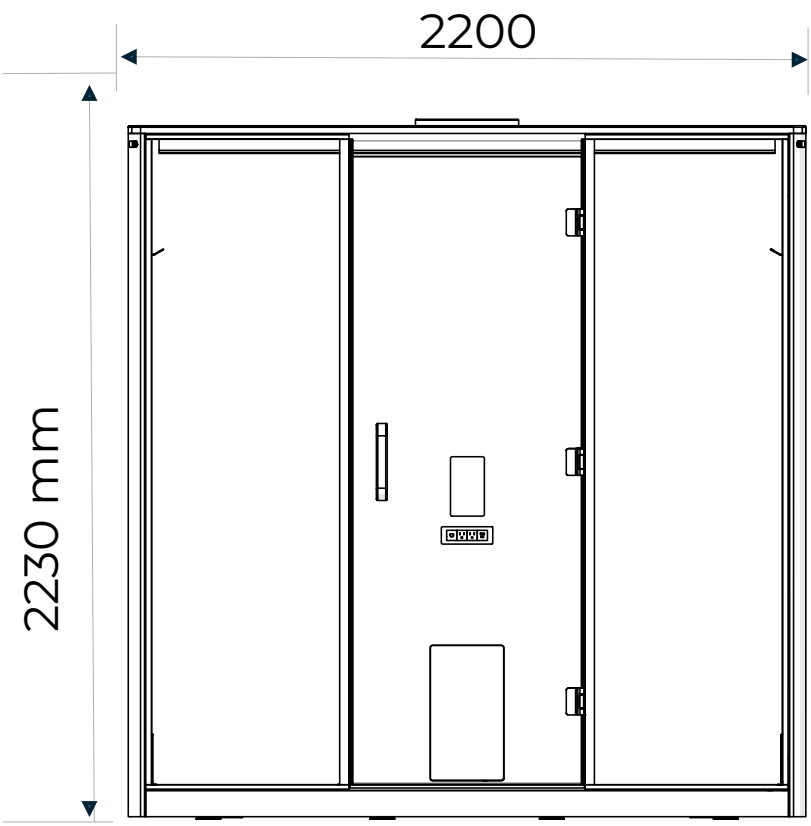

Front Side

The Calma Large is intended for interior use in commercial spaces only. It is to be used by one person at a time.

WARNING – To reduce the risk of burns, fire, electric shock, or injury to persons; use this product **only** for its intended use. Do not use attachments not recommended by the manufacturer.

5.0 – Main Dimensions

ATTENTION!

- The roof of the Calma Large and the ceiling of the building should have a minimum distance of 200 mm / 8 inches between them.

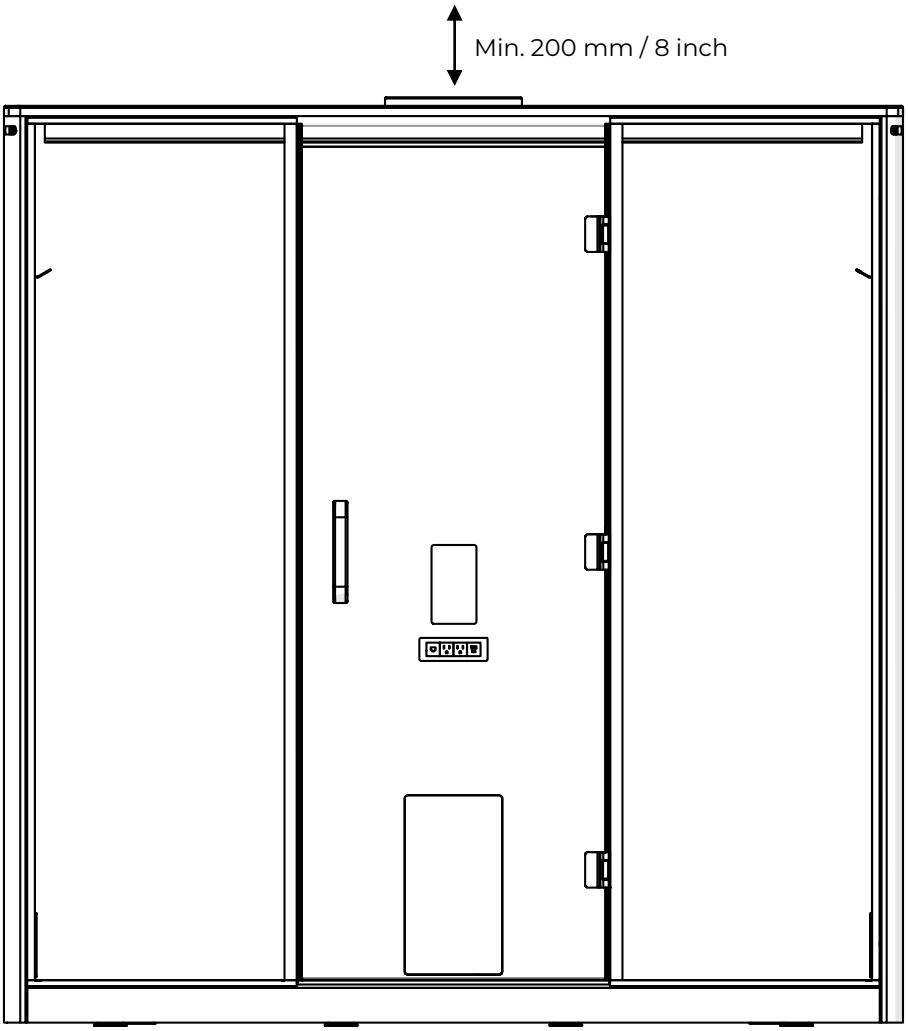

WARNING –
If the fan units are too close to the ceiling of the building, the airflow within the Calma Large will not function properly.

5.1 – Required Working Space

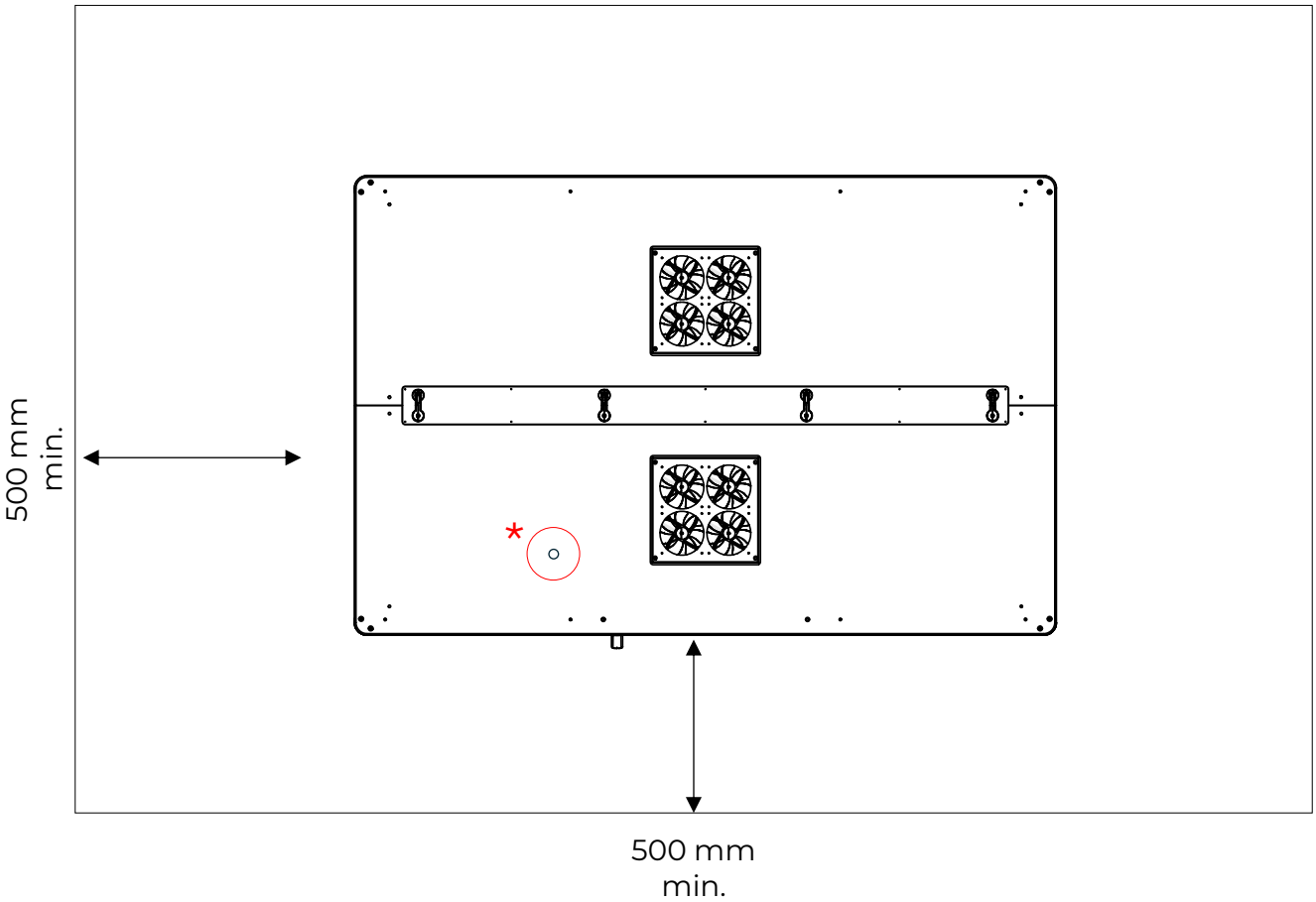

- When installing the Calma pod, ensure that the working space during the installation is no less than 25m². The casters should also only be engaged after the pod has been fully constructed in order to move it into place.

- It is also recommended to construct the Calma Large as close to its final position as possible to avoid moving it after the installation.

- The Calma offers the option of installing a sprinkler system inside the pod through a designated space on the ceiling which can be opened.

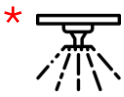

5.0 - FASTENERS

A

Pull Pin Screw-15x

B

Pull Pin Part-15x

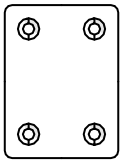

C

Connection Sheet-4x

D

6x14 Bold Head Screw – 12x

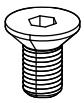

E

6x12 Countersunk Screw – 86x

F

2.9x13 Countersunk Phillips Wood Screw – 32x

G

Dowel – 10x

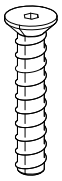

H

8X50 Countersunk Screw – 8x

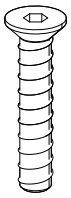

I

6X35 Countersunk Screw – 10x

J

6 x 12 Hex Socket Cap Screw – 24x

K

5 x 12 Bold Head Screw – 9x

L

5x5 Setscrew – 8x

M

Pull Pin – 2x

M

Door Derlin – 2x

M

Slicone Stopper – 4x

M

8x35 Imbus Bold Head Screw – 2x

5.0 - FASTENERS

N

Occupancy Foam – 2x

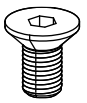

O

6x25 Countersunk Screw – 2x

P

4x12 Countersunk Screw – 4x

Q

Rapid Clip – 8x

Q

Rapid Pin – 8x

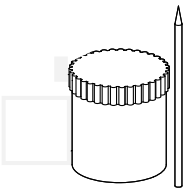

R

Filler Paint & Brush – 1x

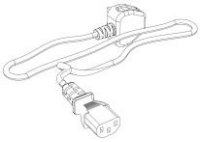

S

Power Cable – 1x

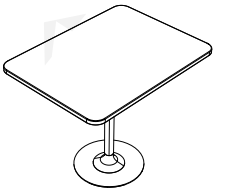

T

TAU Desk Connection Hardware

U

6x30 Bold Head Screw – 4x (For TV Mounting Bracket)

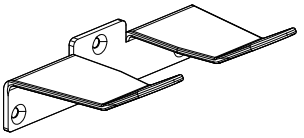

V

Hanger – 2x

W

5x13,5 Countersunk Screw – 6x

X

3.5x16 Countersunk Phillips Wood Screw – 4x

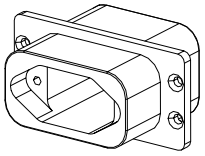

Y

Power Inlet – 1x

1.

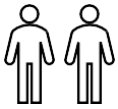

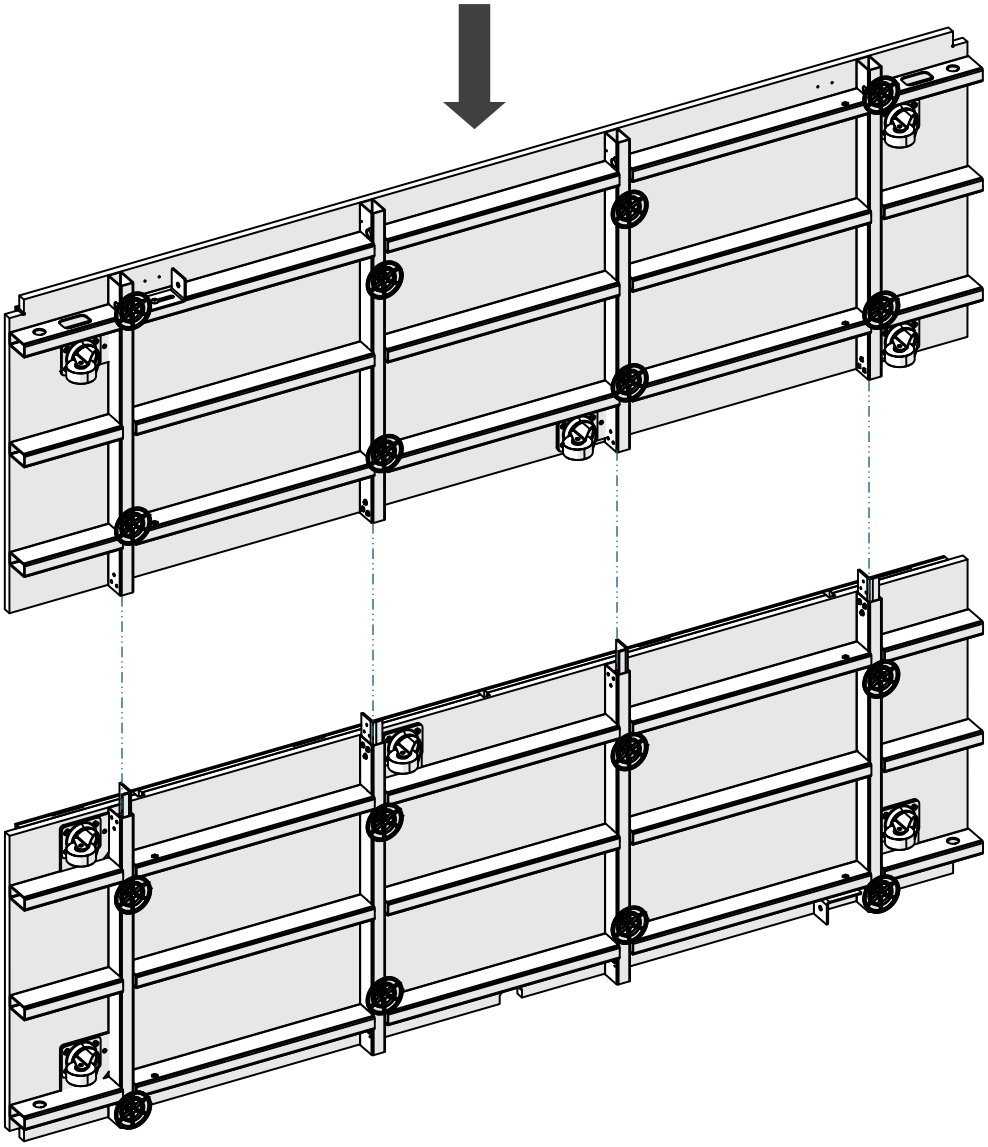

2.

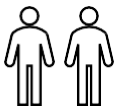

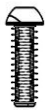

6x14 BUTTON HEAD BOLT

12x

ALLEN
(4 mm)

+

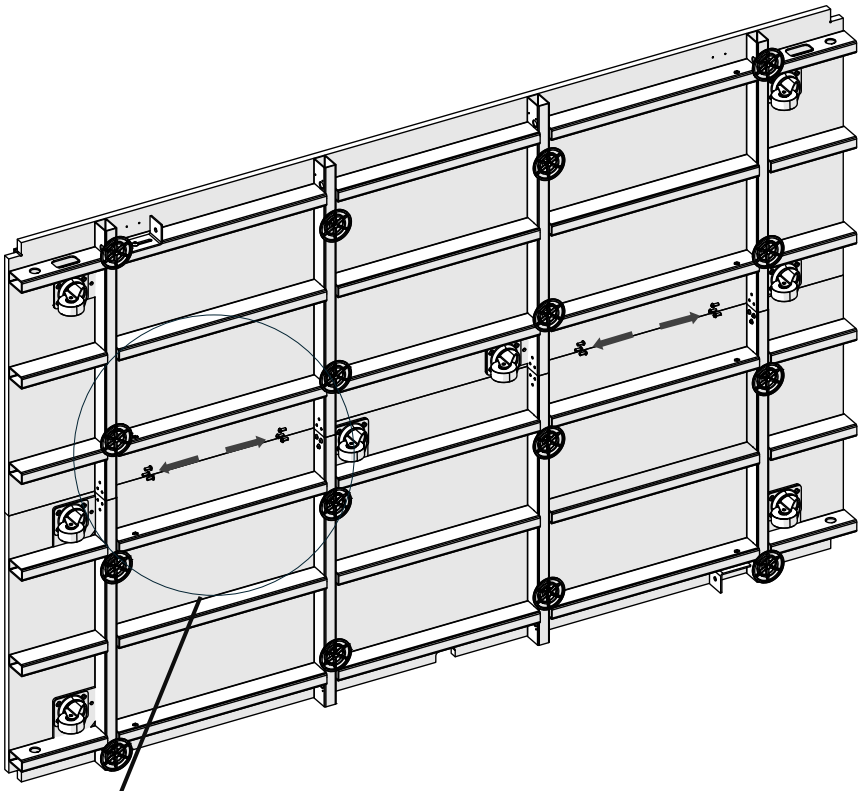

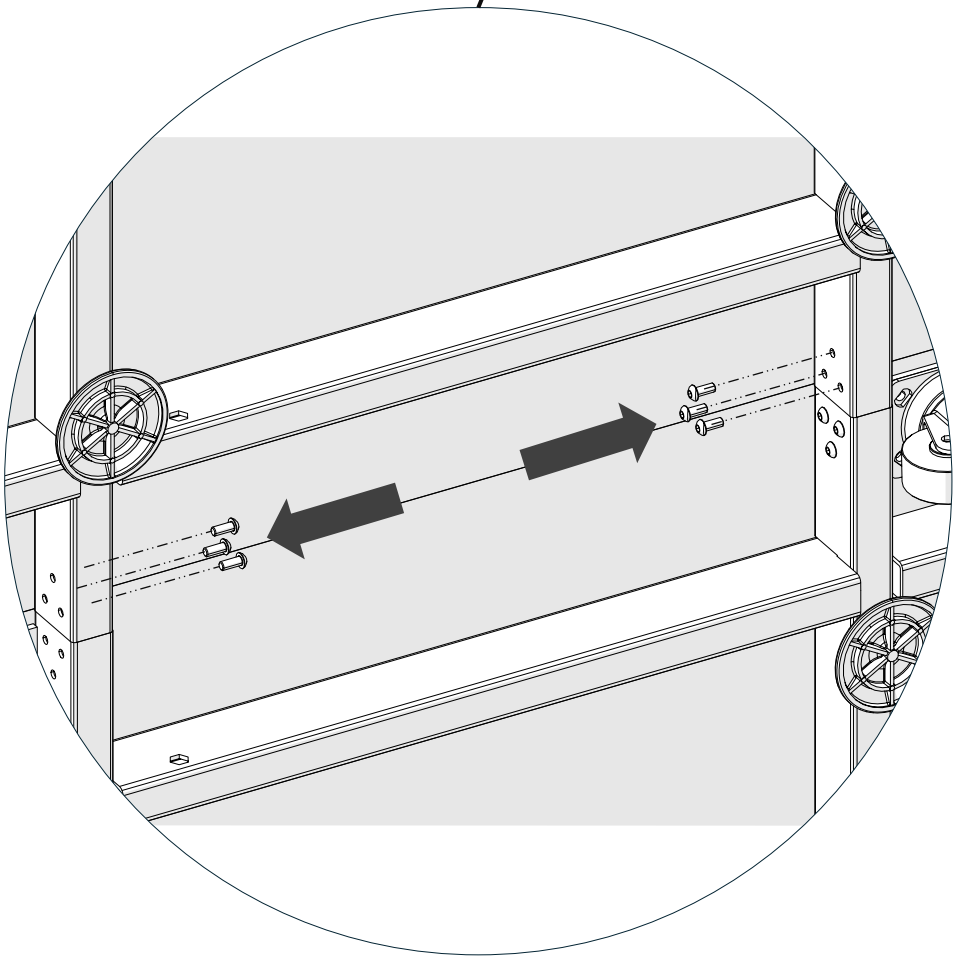

3.

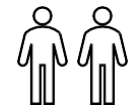

16x

E

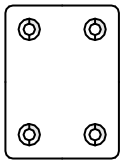

4x

3x

A

3x

B

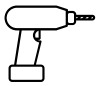

POWER
TOOL

+

ALLEN
(4 / 6mm)

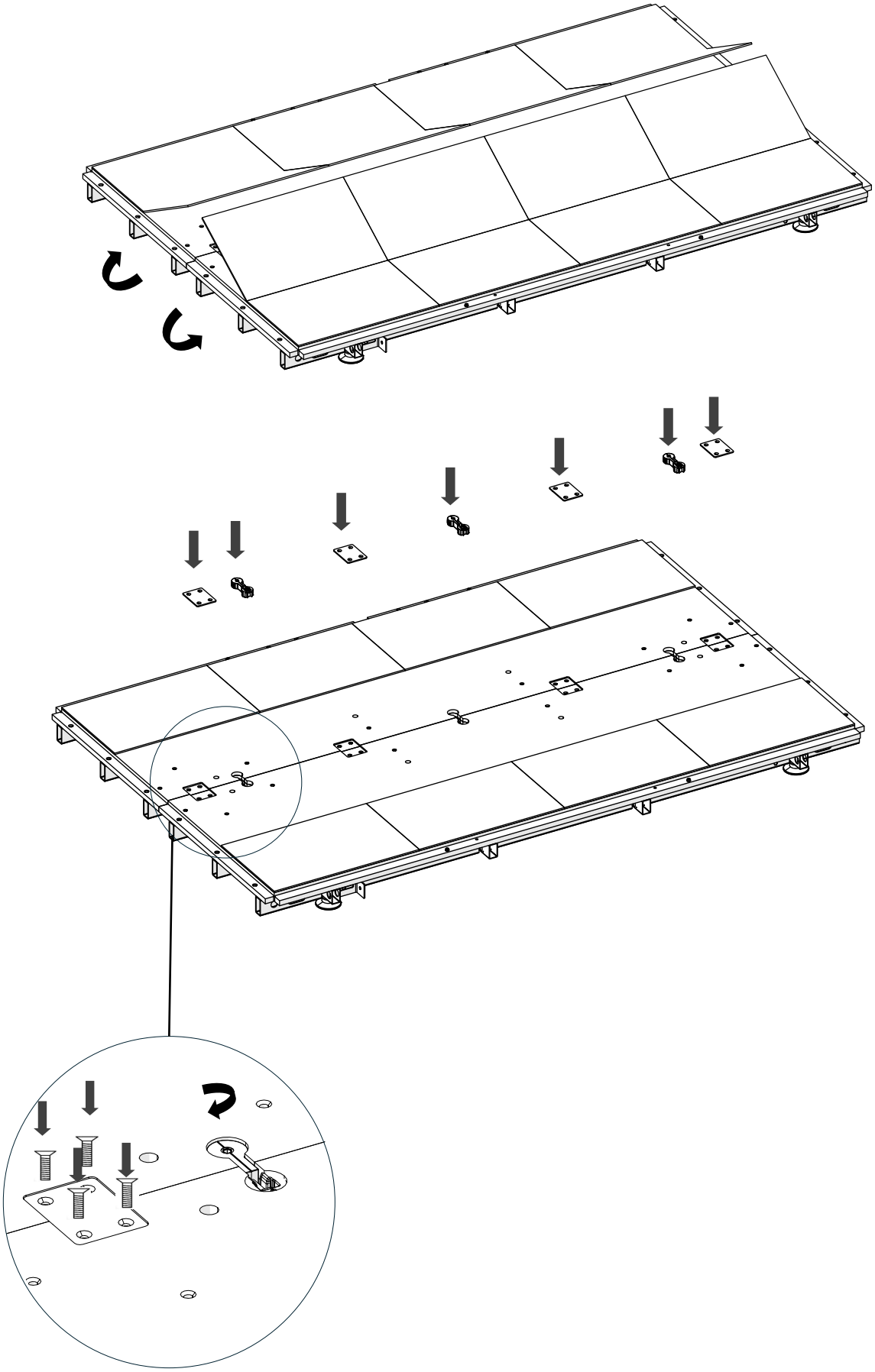

4.

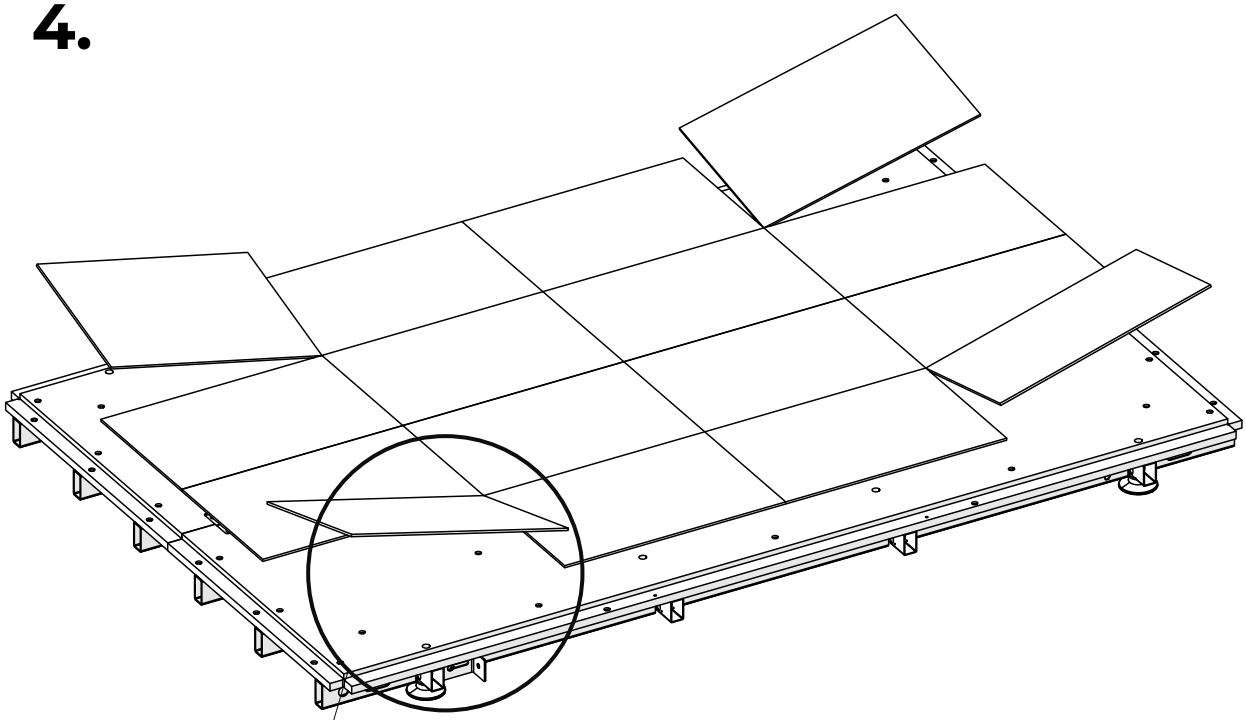

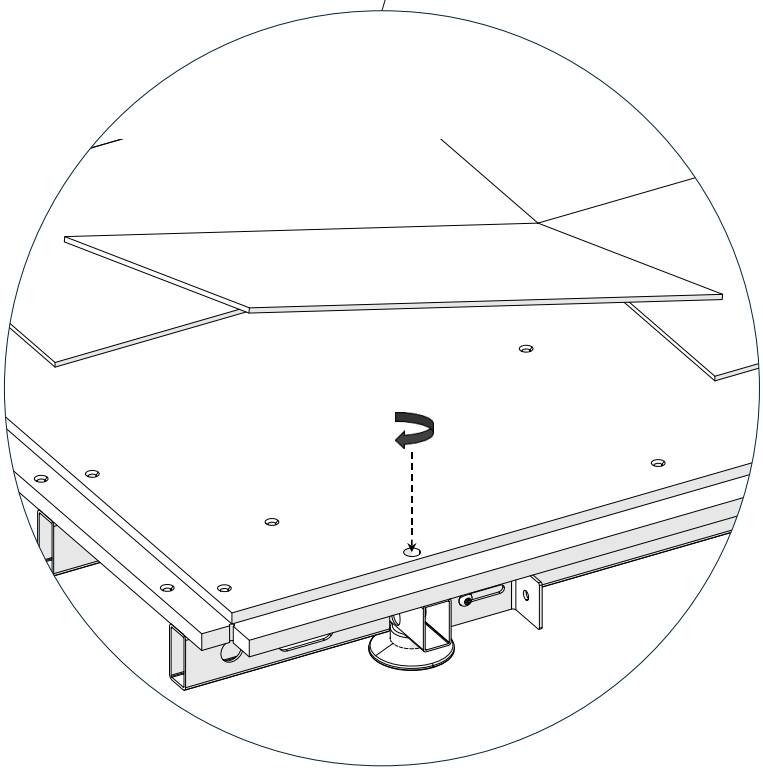

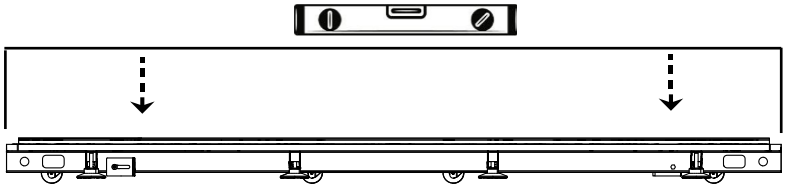

Seismic Anchoring (Optional)

5.

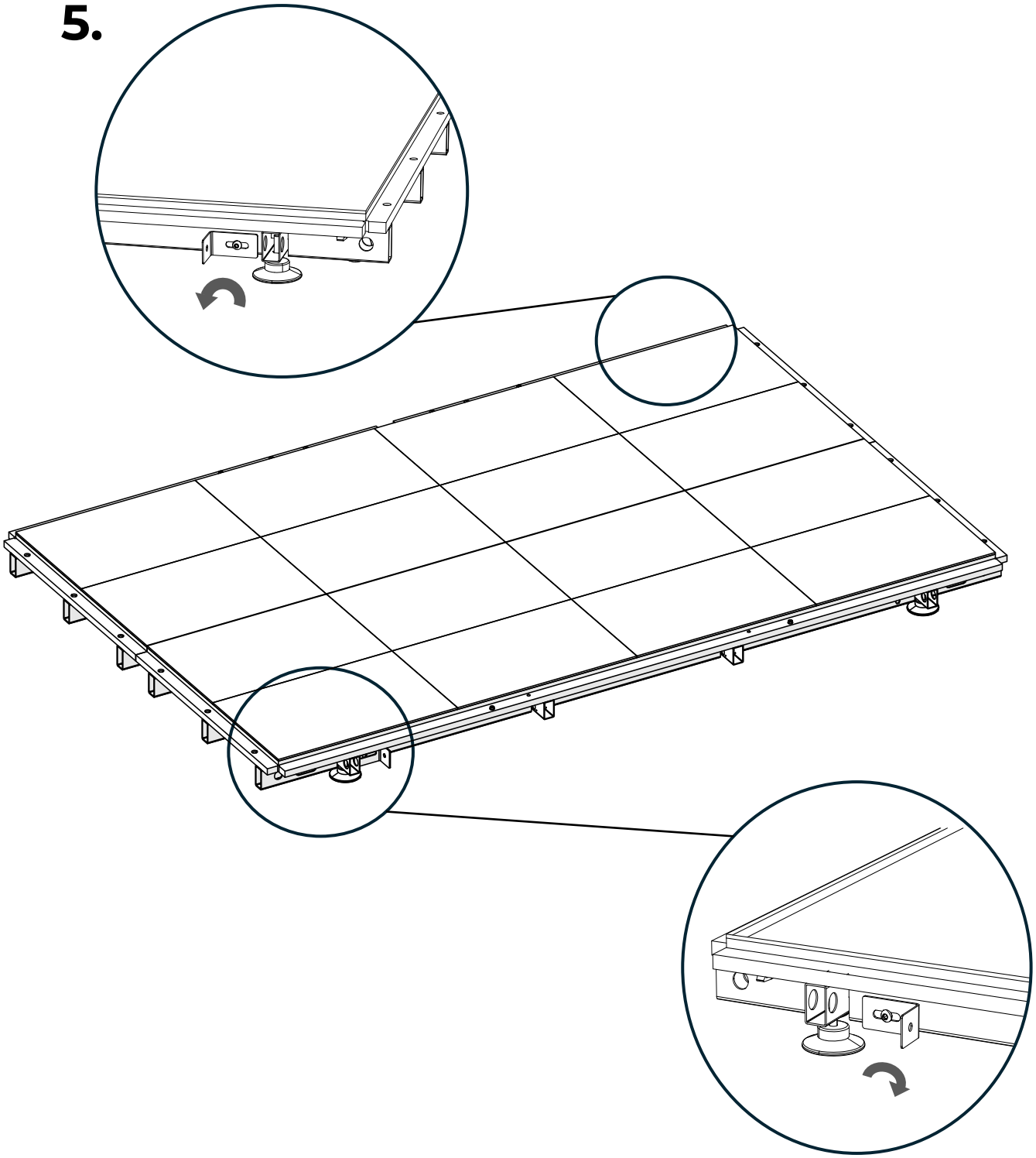

6.

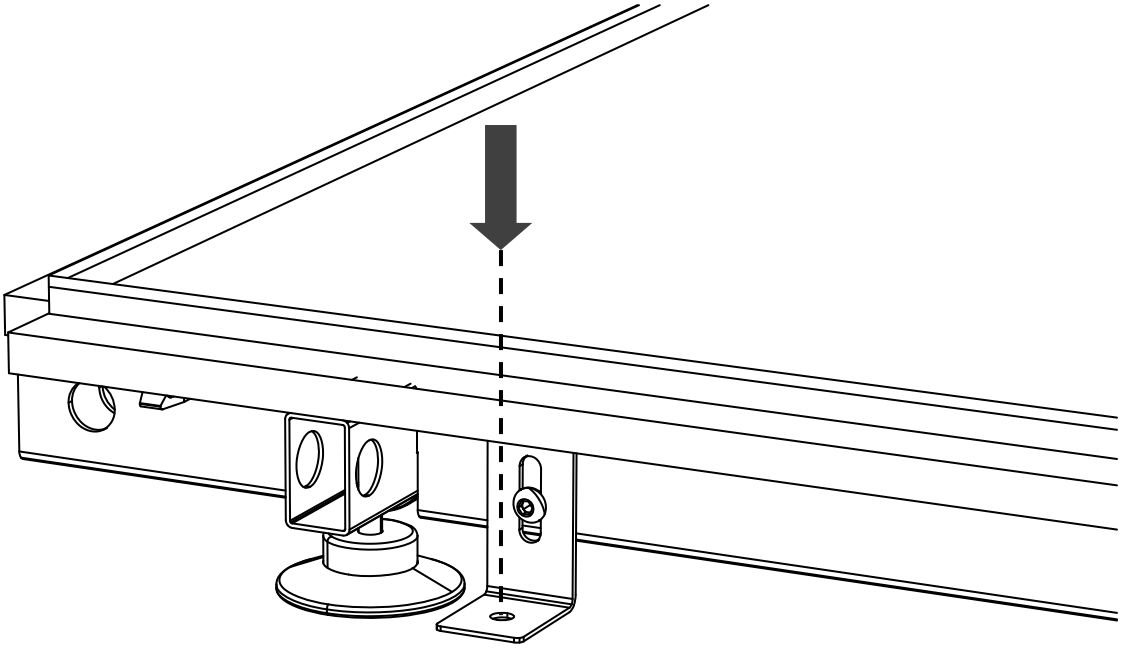

! Do this for both side.

7.

M6 x 12 Hex
Socket Cap Screw

4x

J

6x12 FLAT HEAD
SCREW

3x

E

POWER
TOOL

+

ALLEN
(4/5mm)

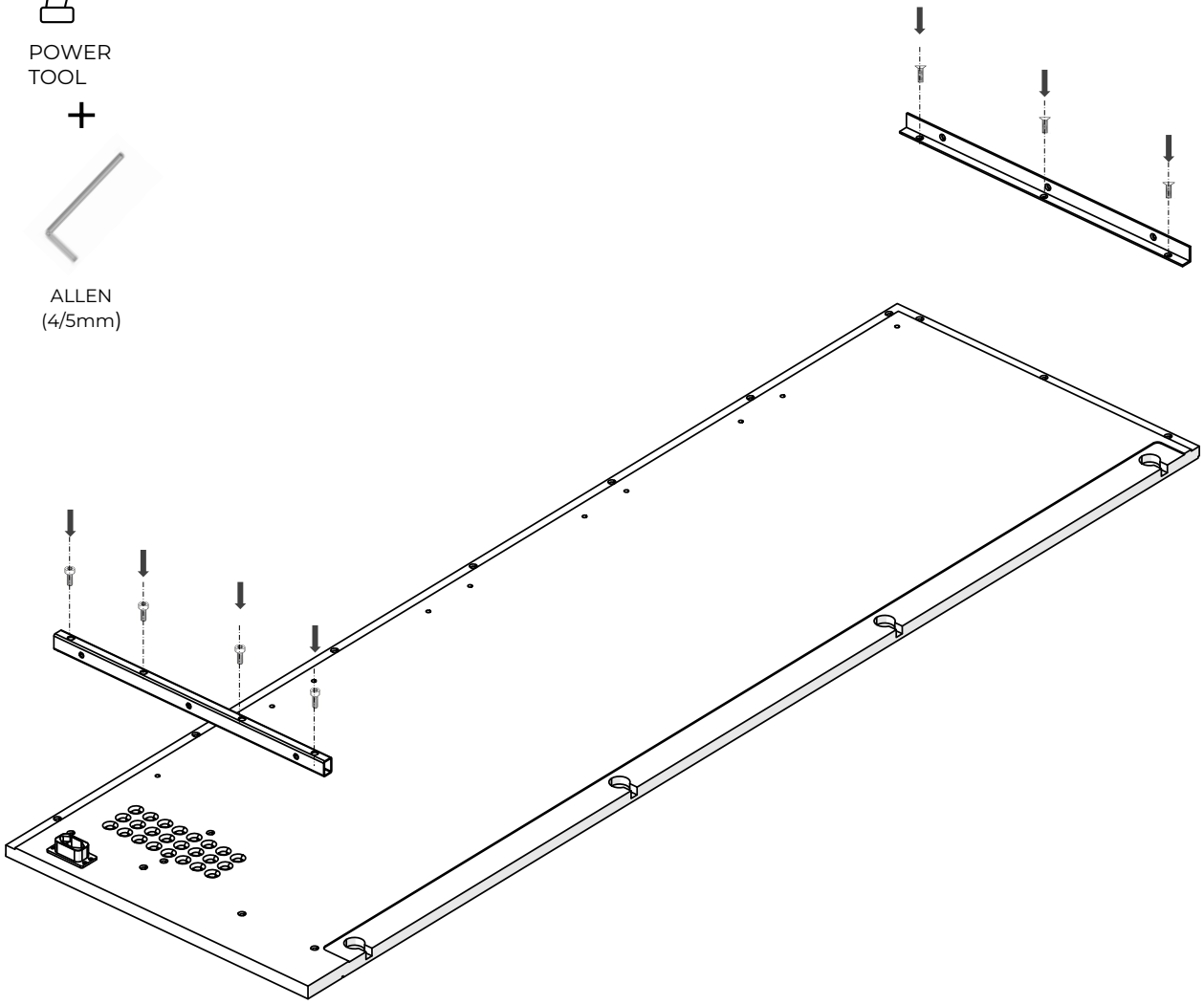

! Repeat this step on all four sides.

8.

The right wall can be identified from the holes on the wall.

! ATTENTION: ensure that the cable is placed on top of the floor when installing.

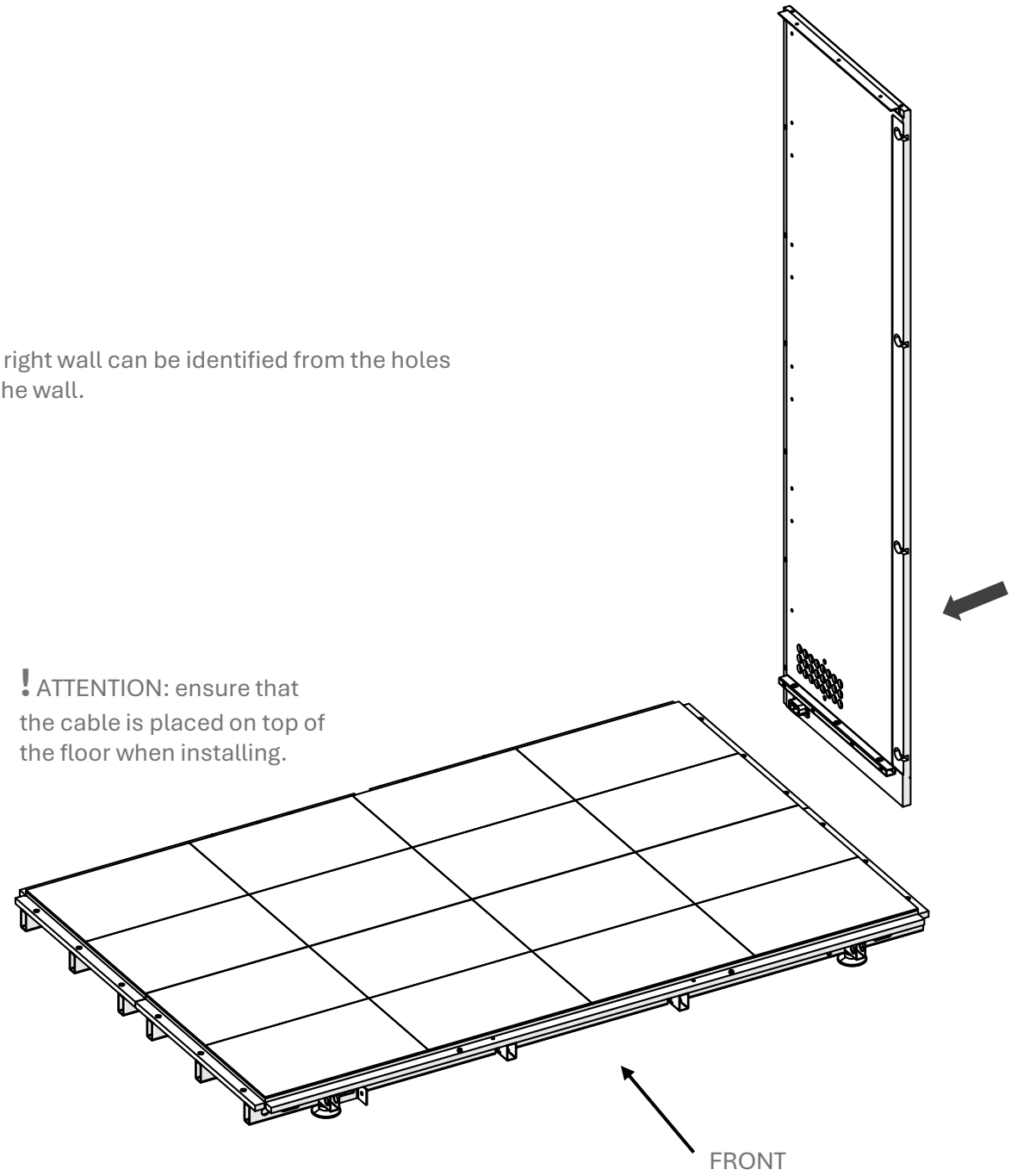

9.

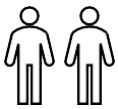

3x

ALLEN
(4 mm)

+

WARNING the wall should be supported by a second person as the other wall is installed in the next step.

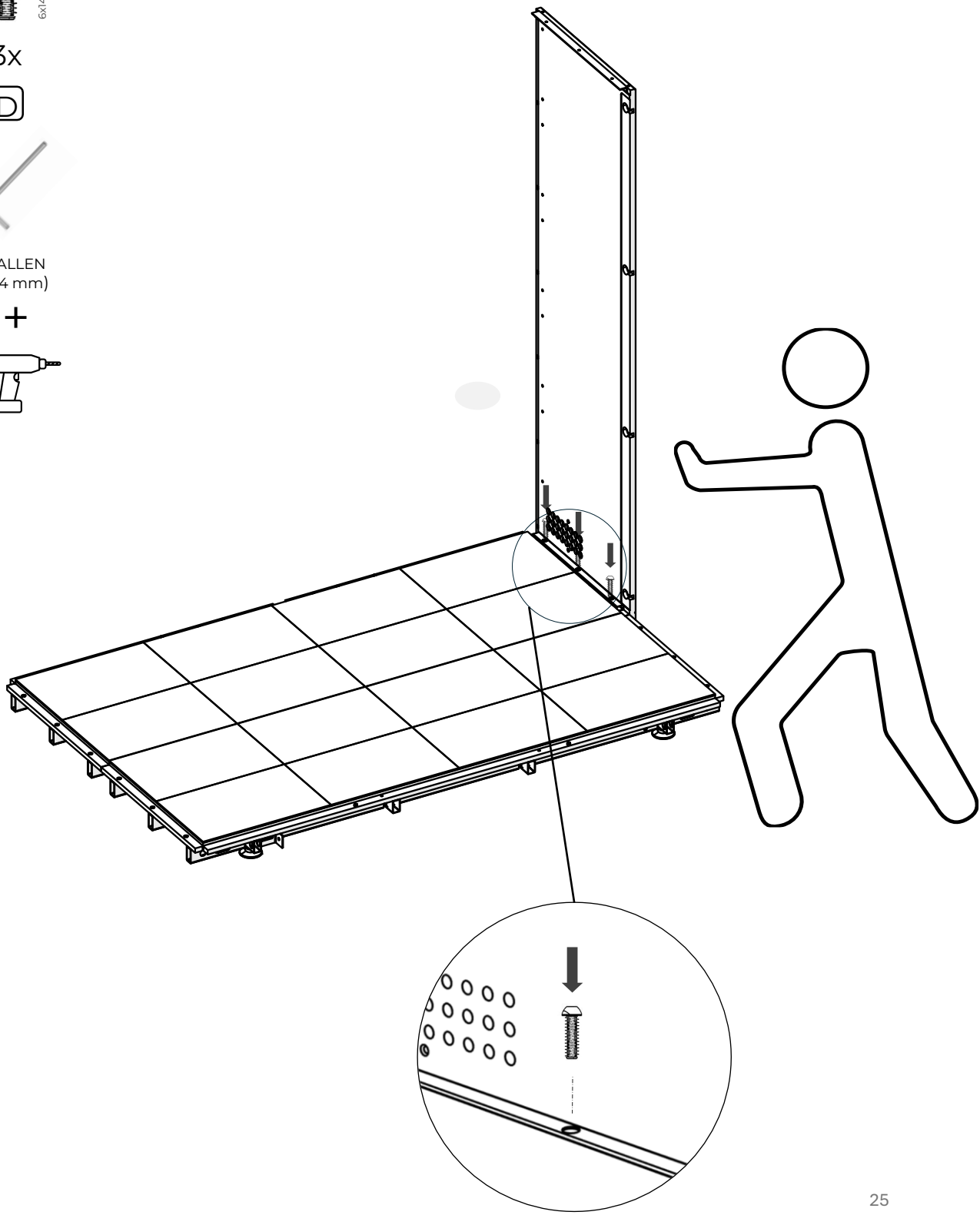

10.

WARNING the **right** wall should be supported by a second person as the back wall is installed.

When placing the window, ensure that the panel is places on the screw that is on the base.

11.

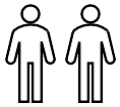

7x

E

POWER
TOOL

+

ALLEN
(4mm)

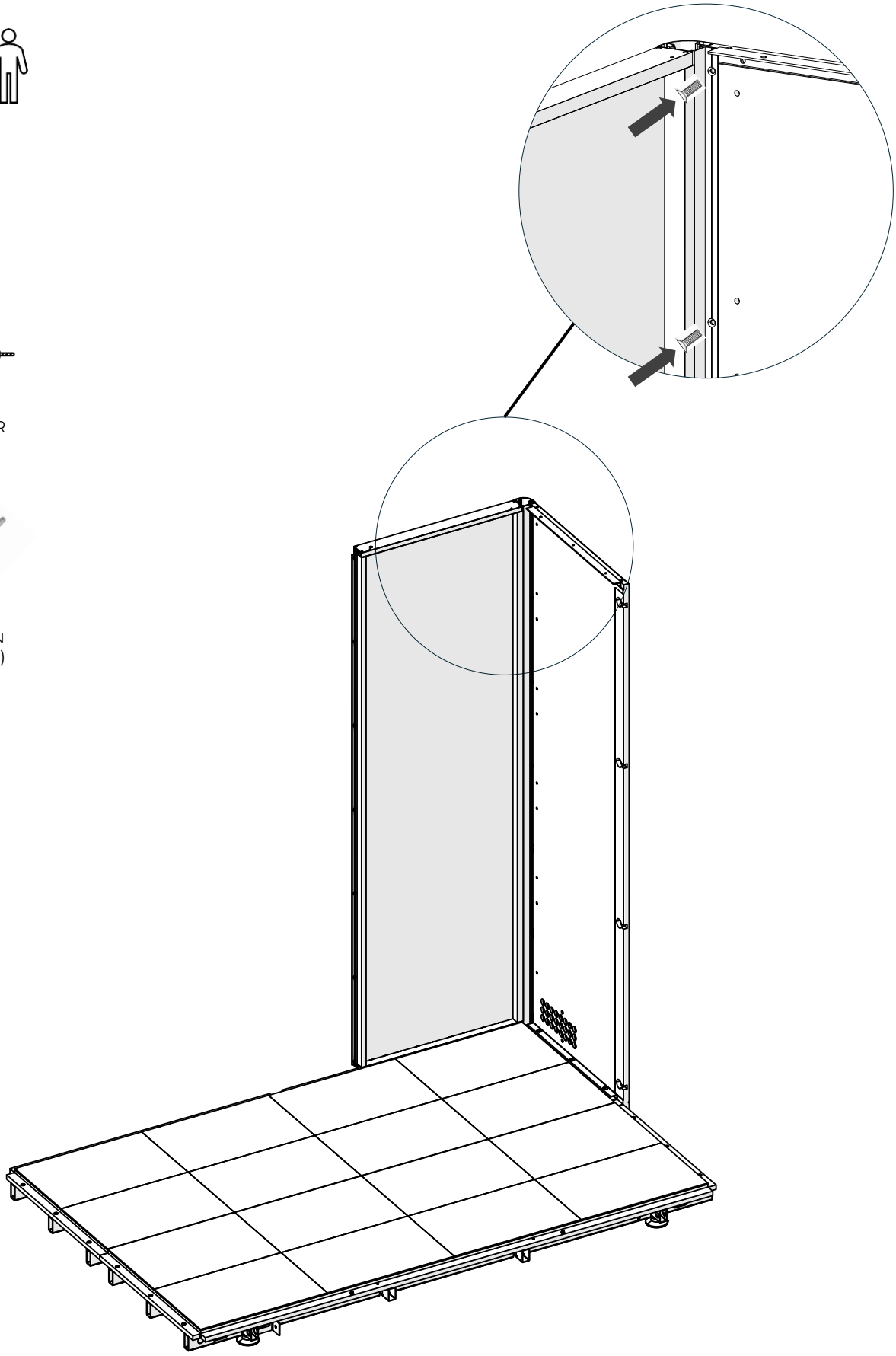

12.

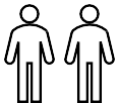

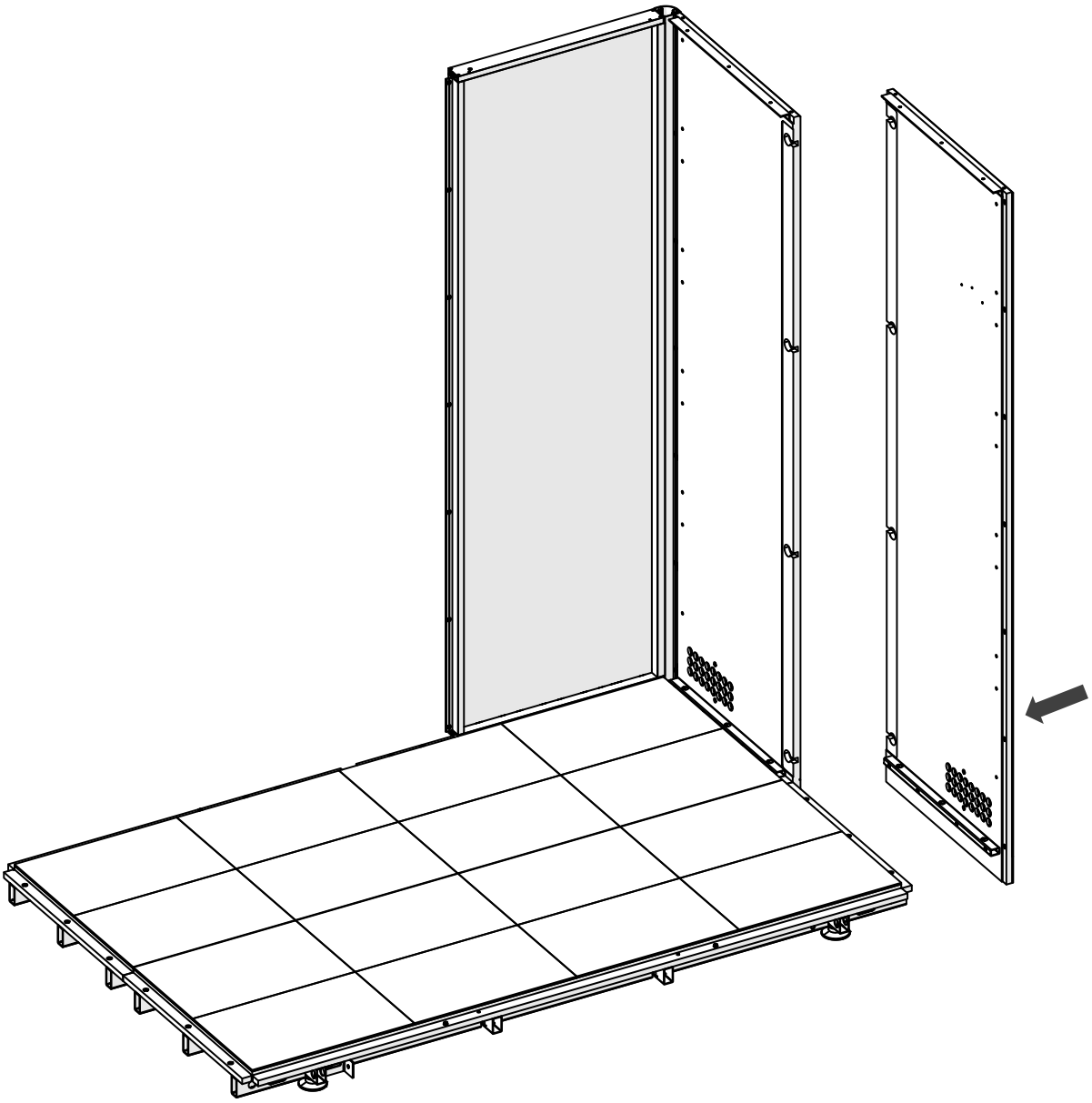

13.

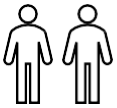

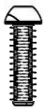

3x

D

4x

A

4x

B

+

ALLEN
(4 / 6mm)

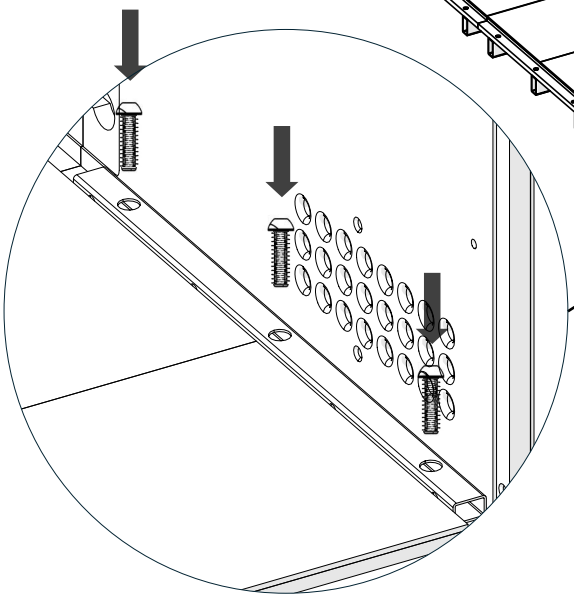

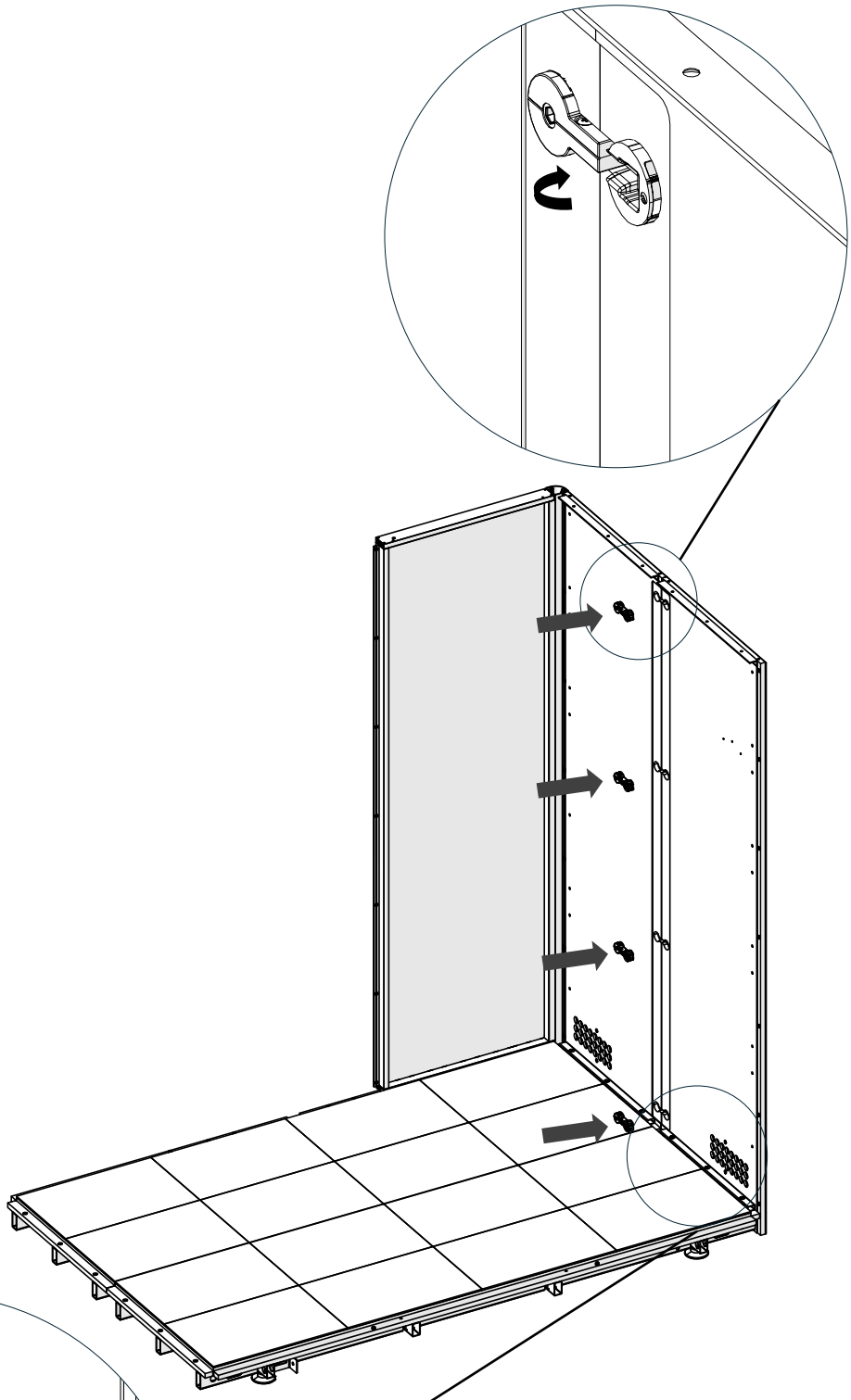

14.

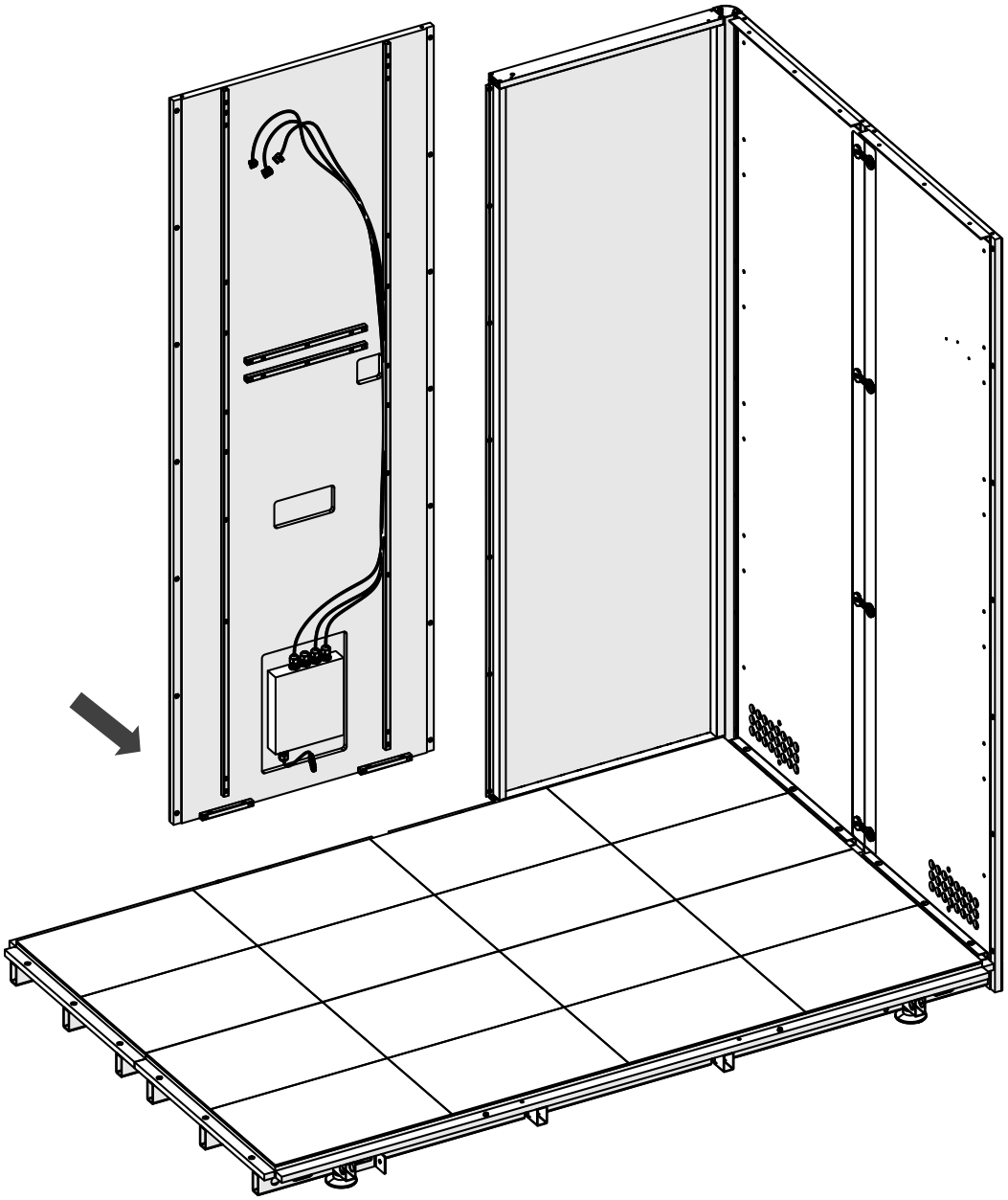

15.

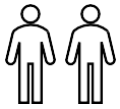

7x

E

4x

J

POWER
TOOL

+

ALLEN
(4 mm)

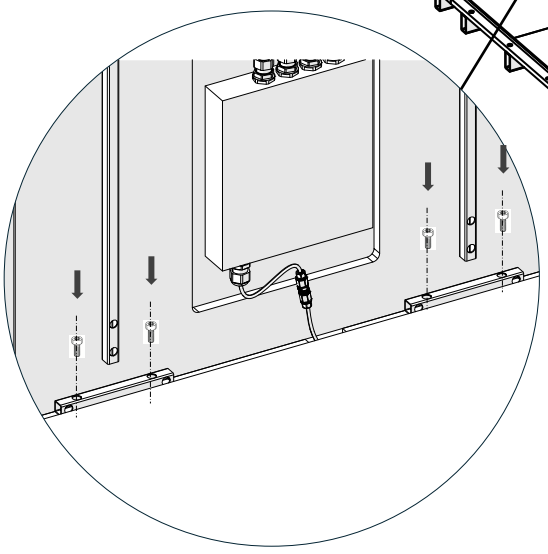

16.

The bolt in the floor is to be used for aligning the window.

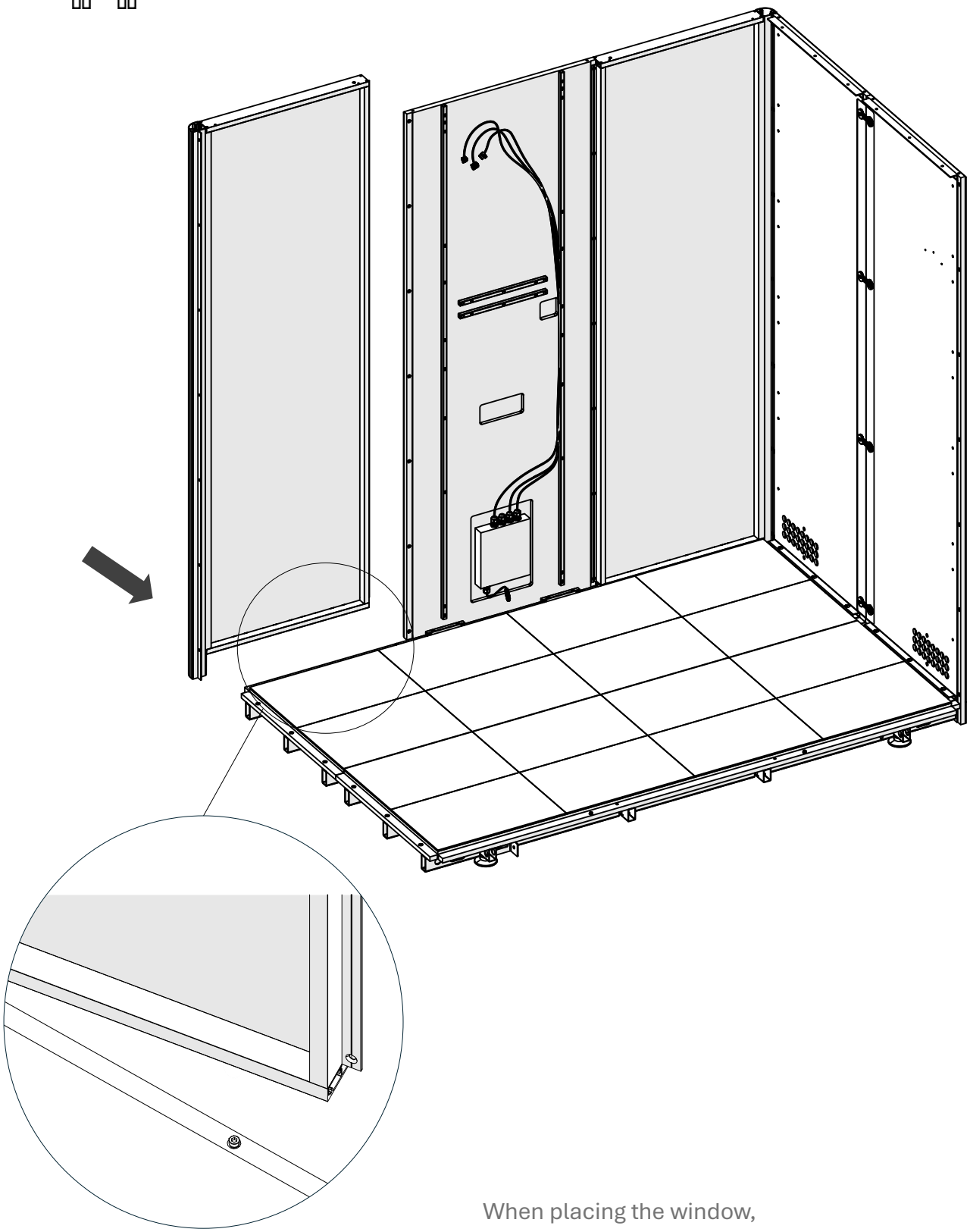

When placing the window, ensure that the panel is places on the screw that is on the base.

17.

7x

E

POWER
TOOL

+

ALLEN
(4mm)

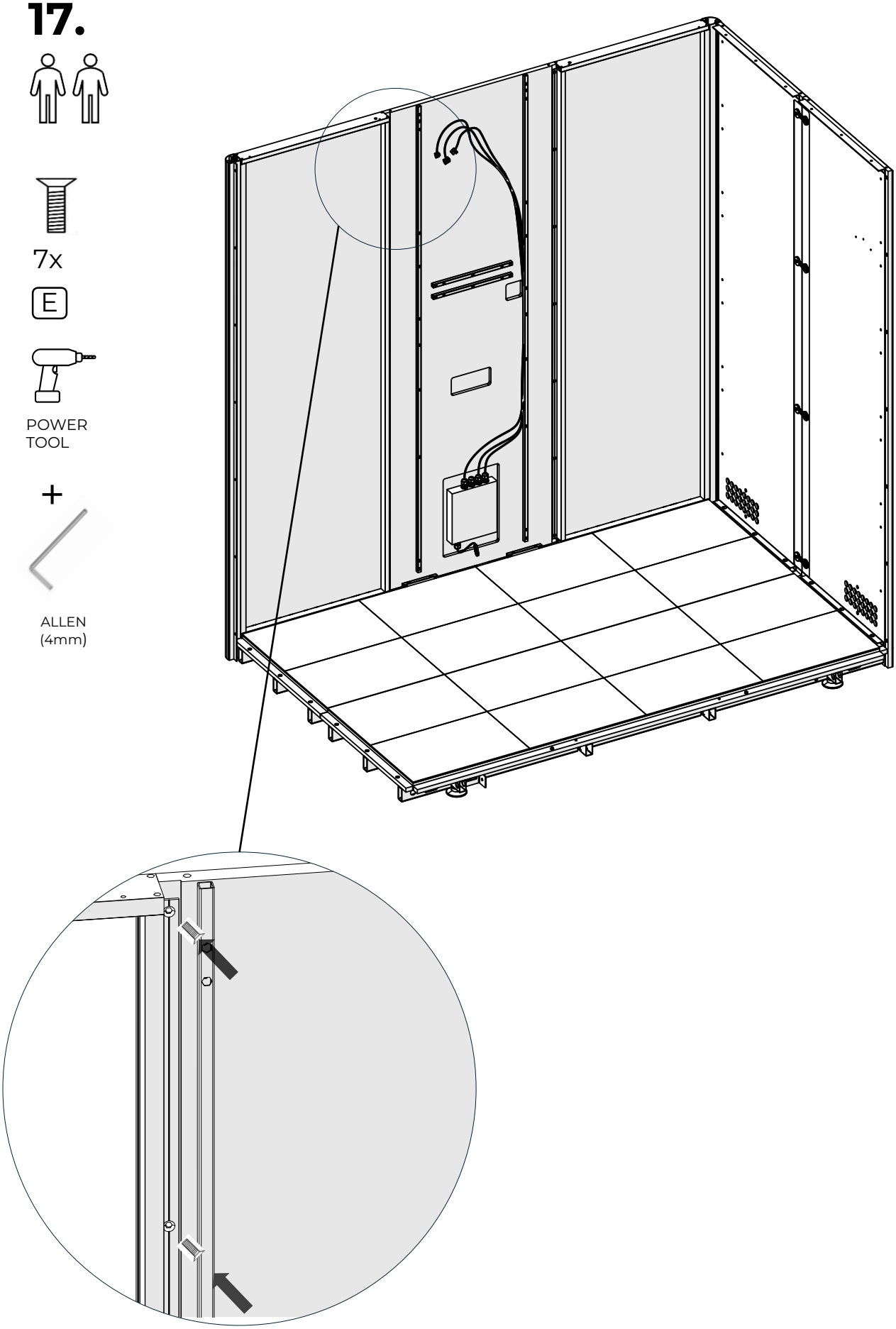

18.

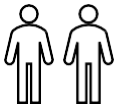

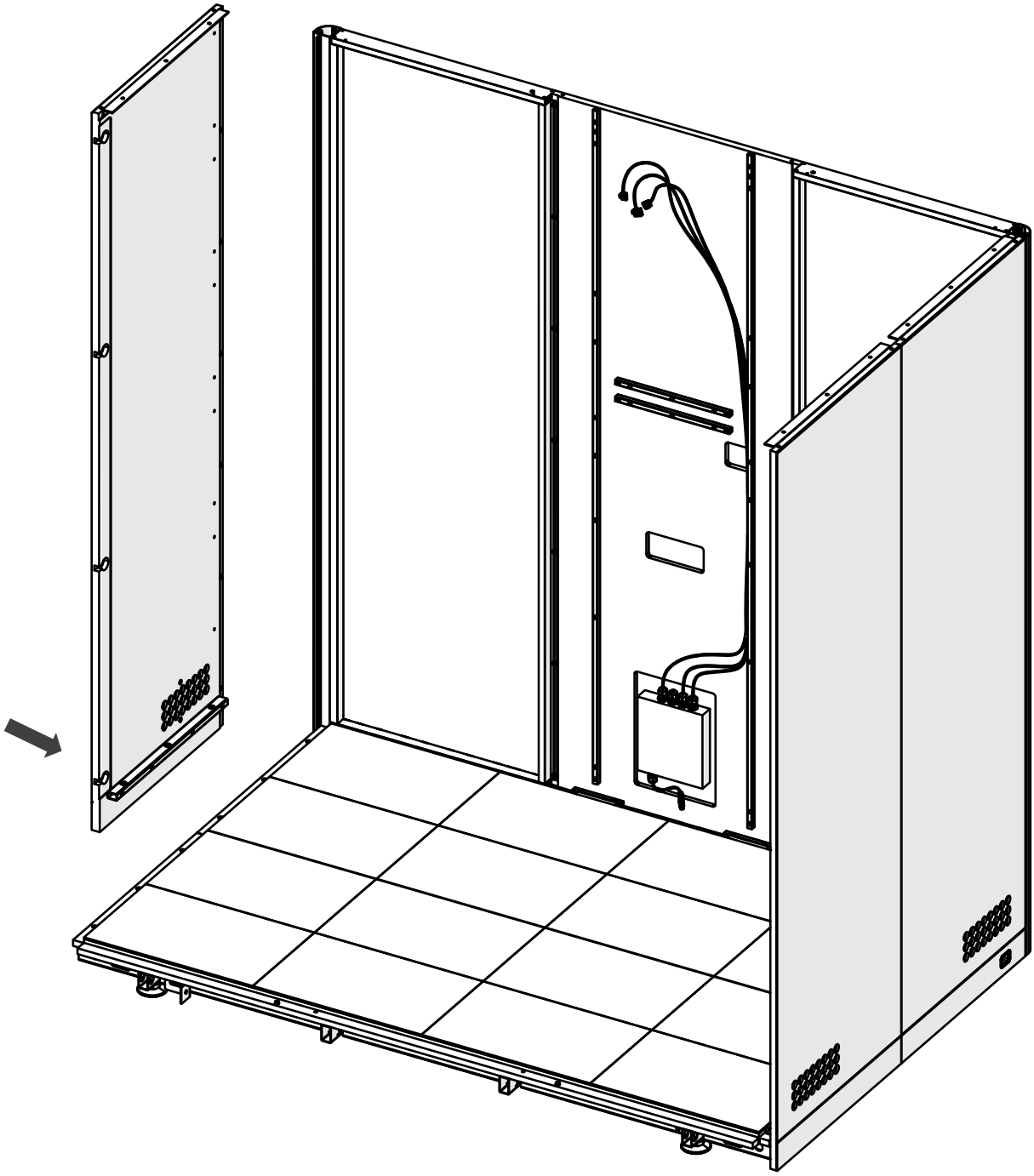

19.

6x12 FLAT HEAD HEX SCREW

7x

E

6x14 HEX SOCKET BUTTON HEAD SCREW

3x

D

POWER TOOL

+

ALLEN (4mm)

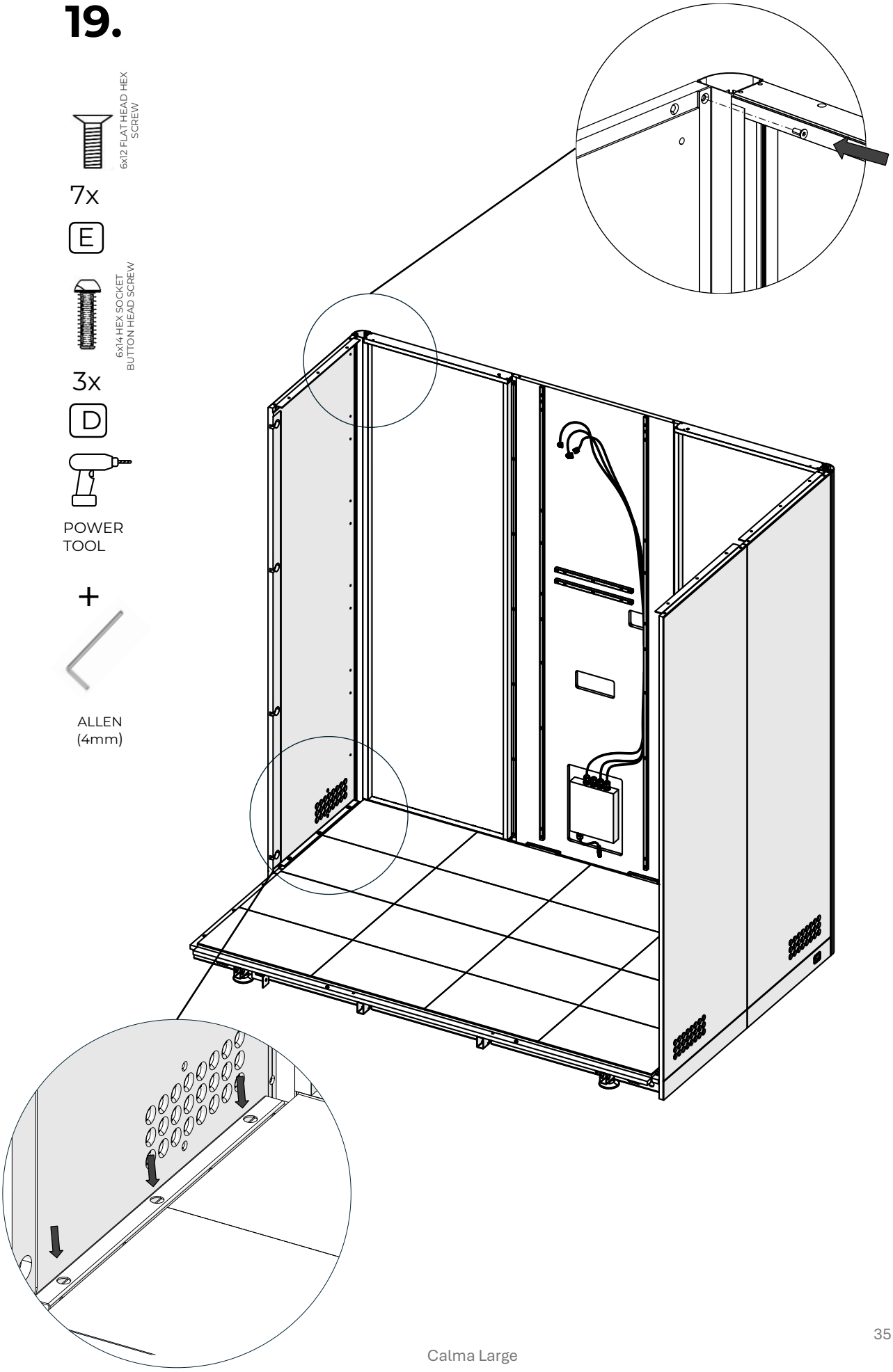

20.

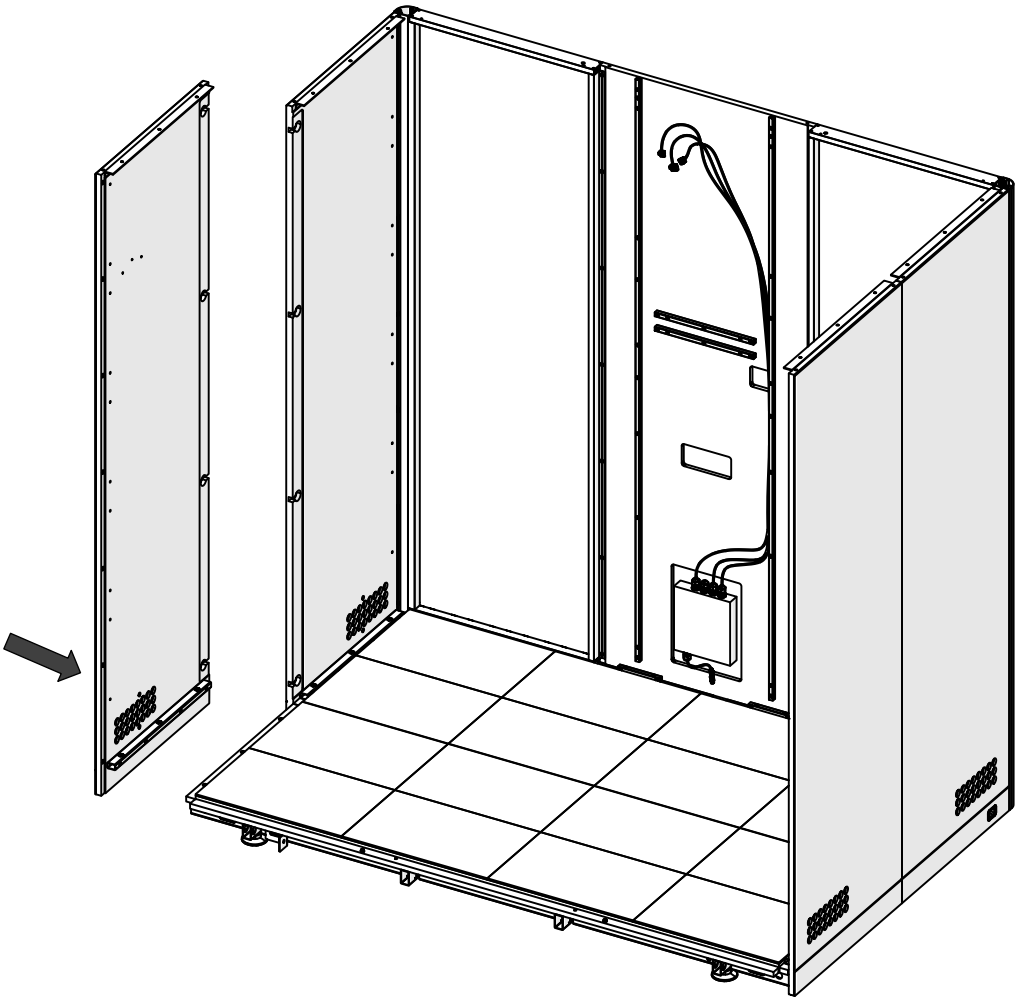

21.

3x

D

4x

A

4x

B

+

ALLEN
(4 / 6mm)

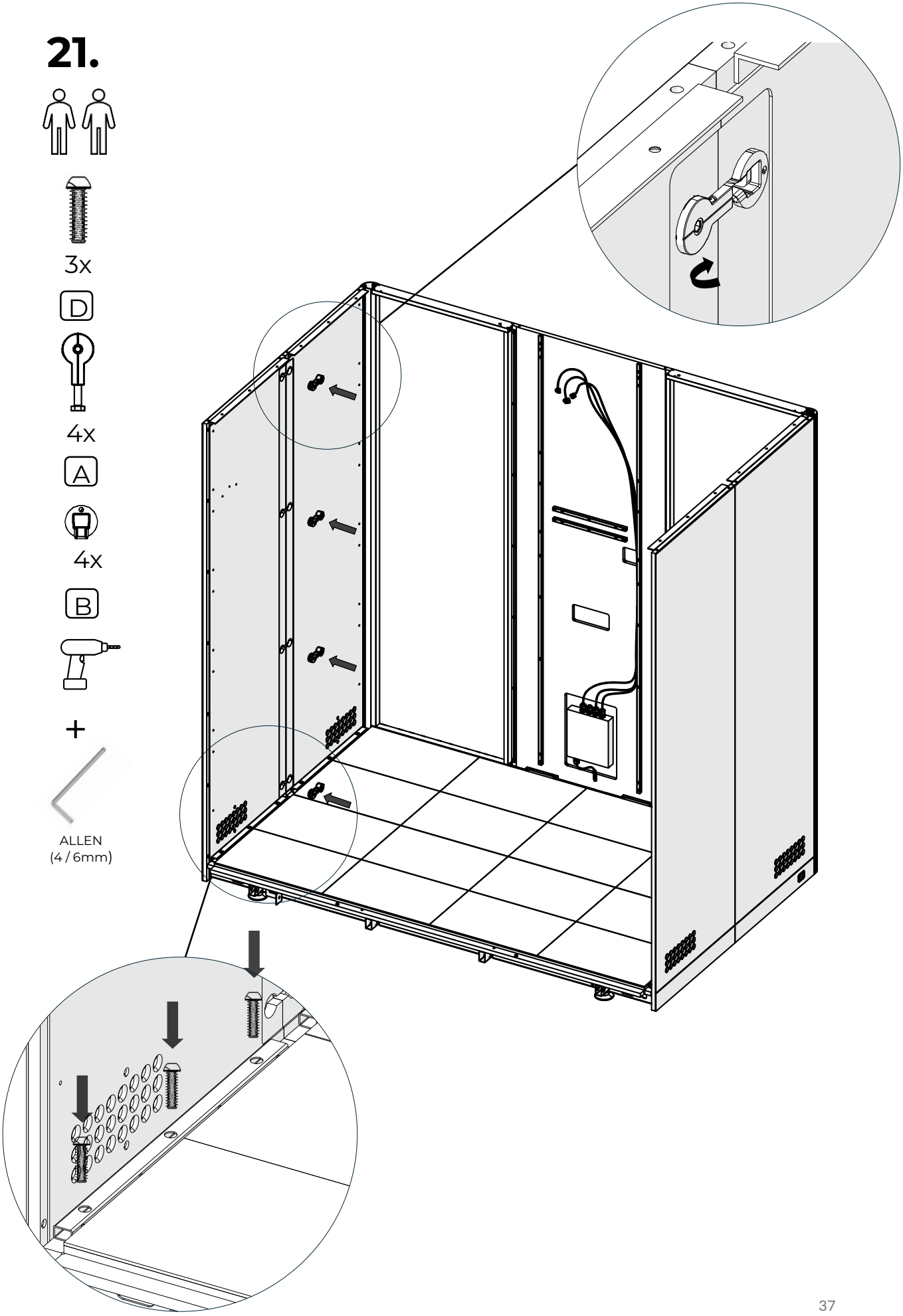

22.

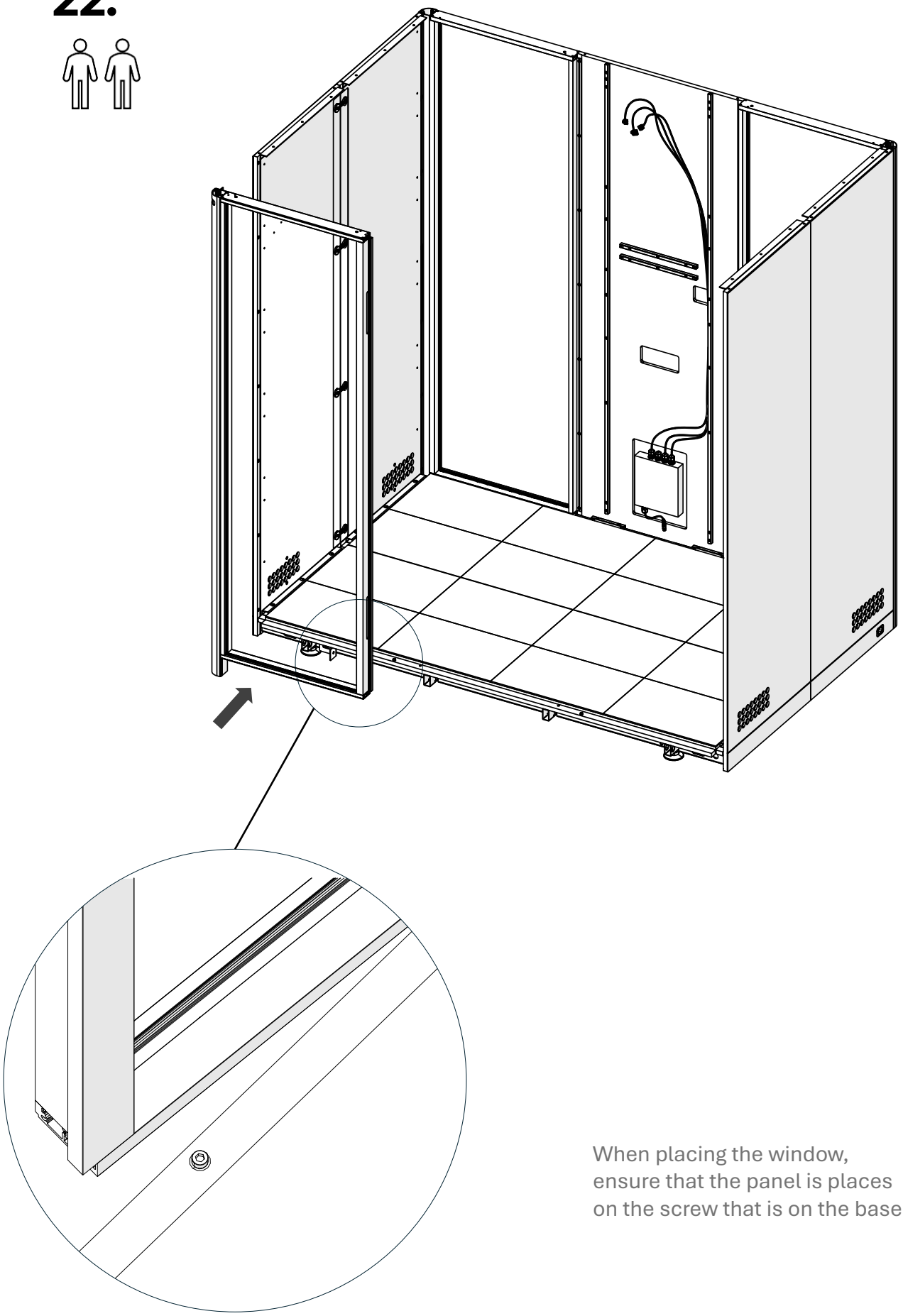

When placing the window, ensure that the panel is places on the screw that is on the base.

23.

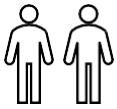

7x

E

POWER
TOOL

+

ALLEN
(4 mm)

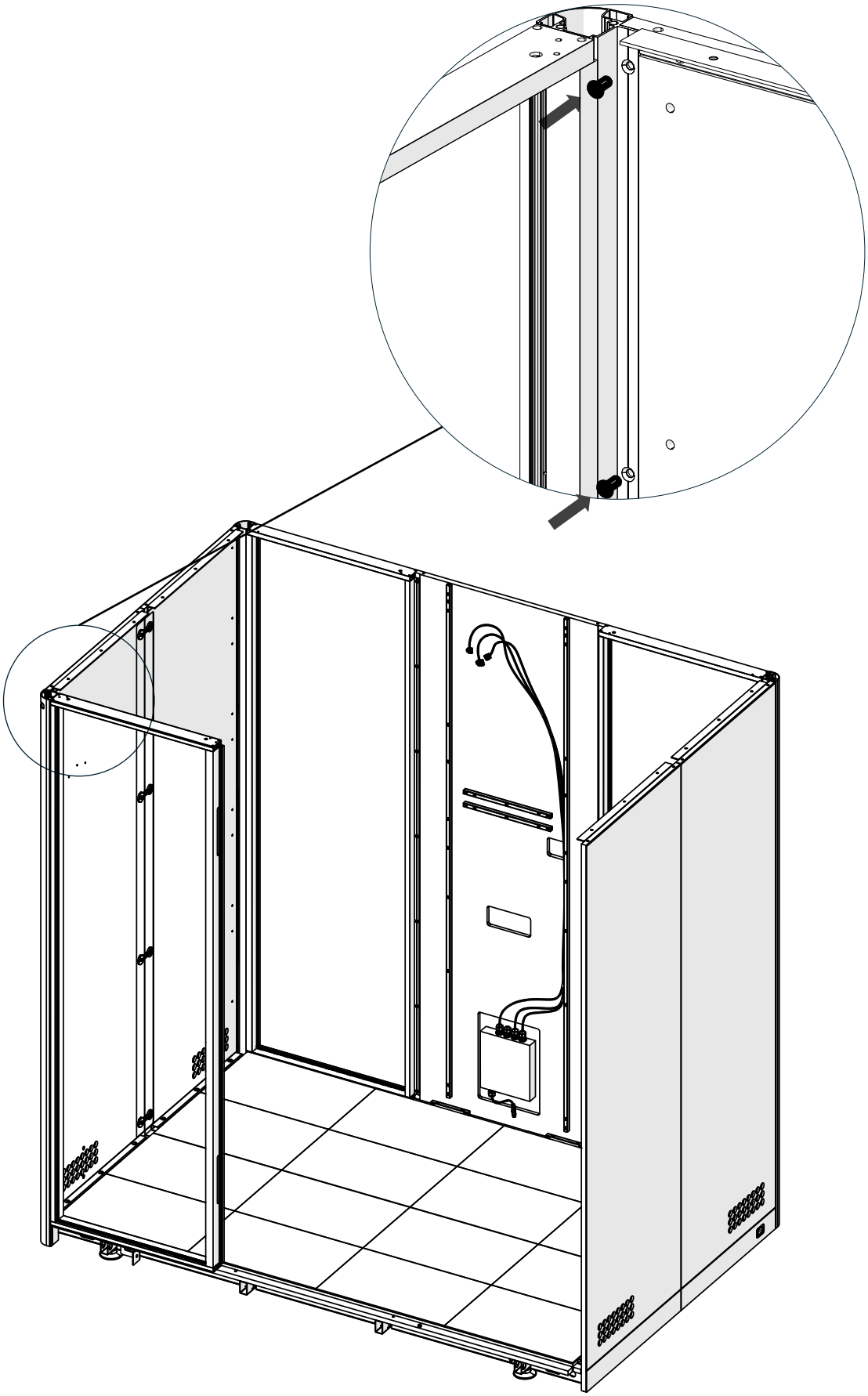

24.

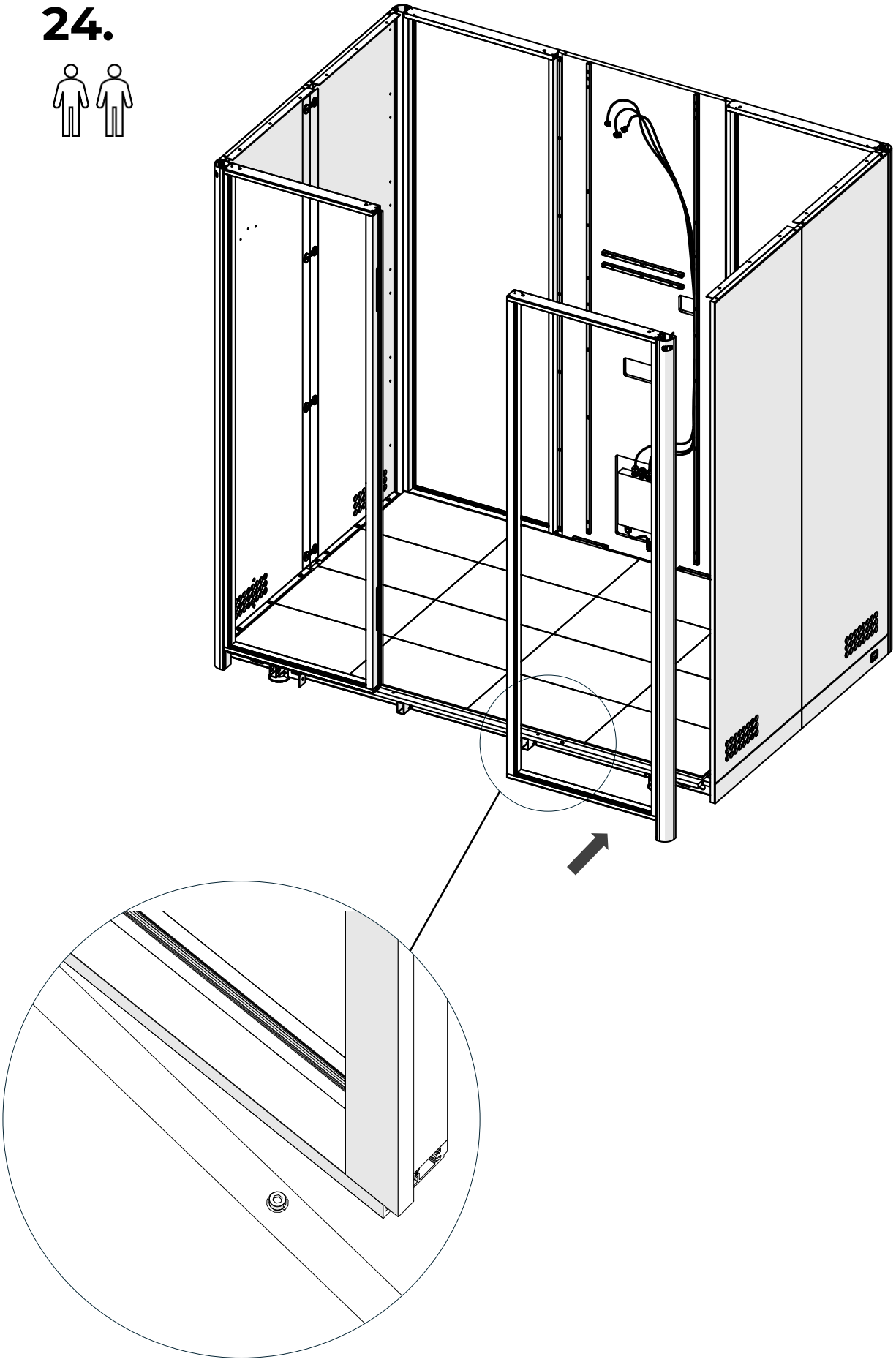

25.

7x

E

POWER
TOOL

+

ALLEN
(4 mm)

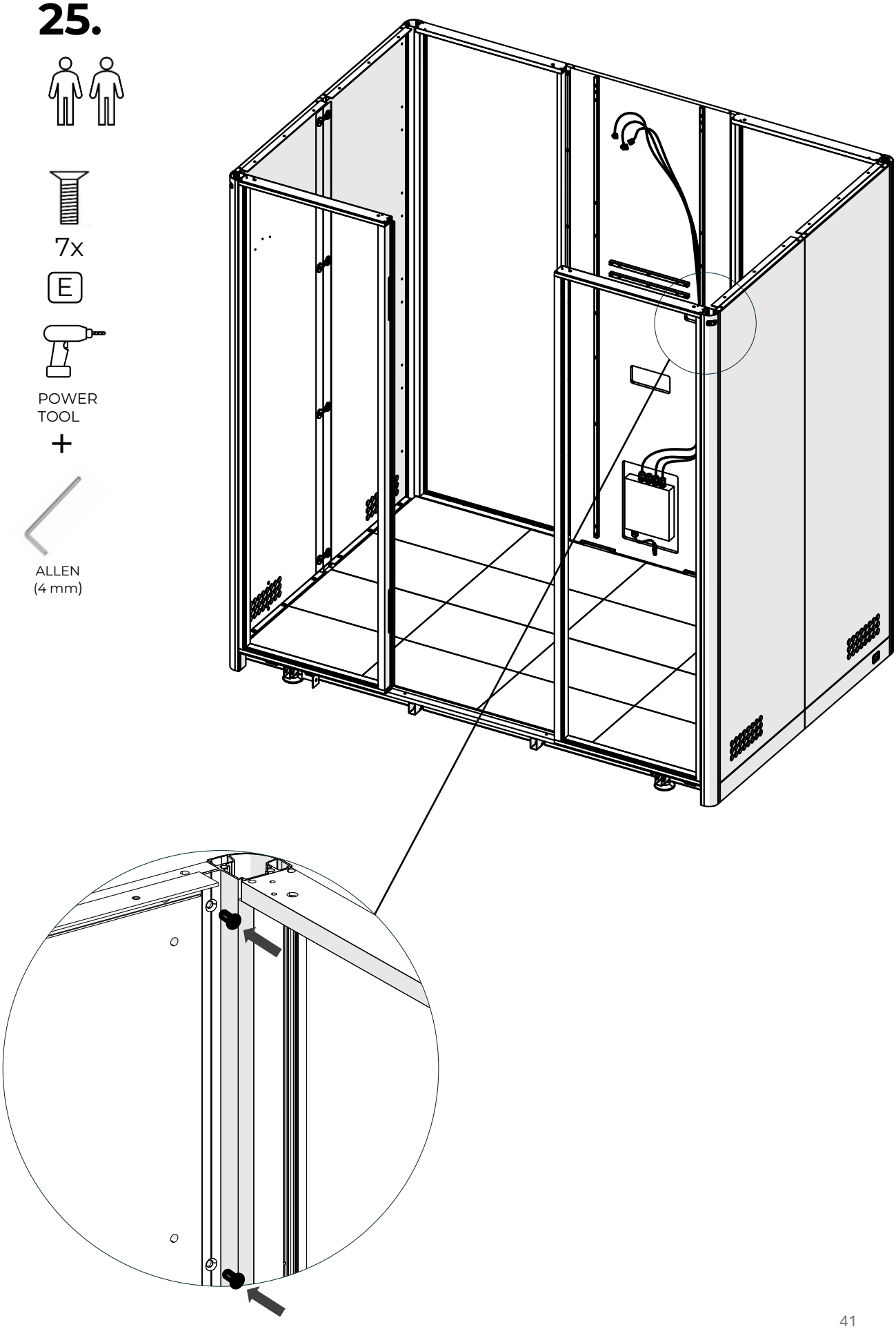

26.

2x

POWER
TOOL

+

ALLEN
(3 mm)

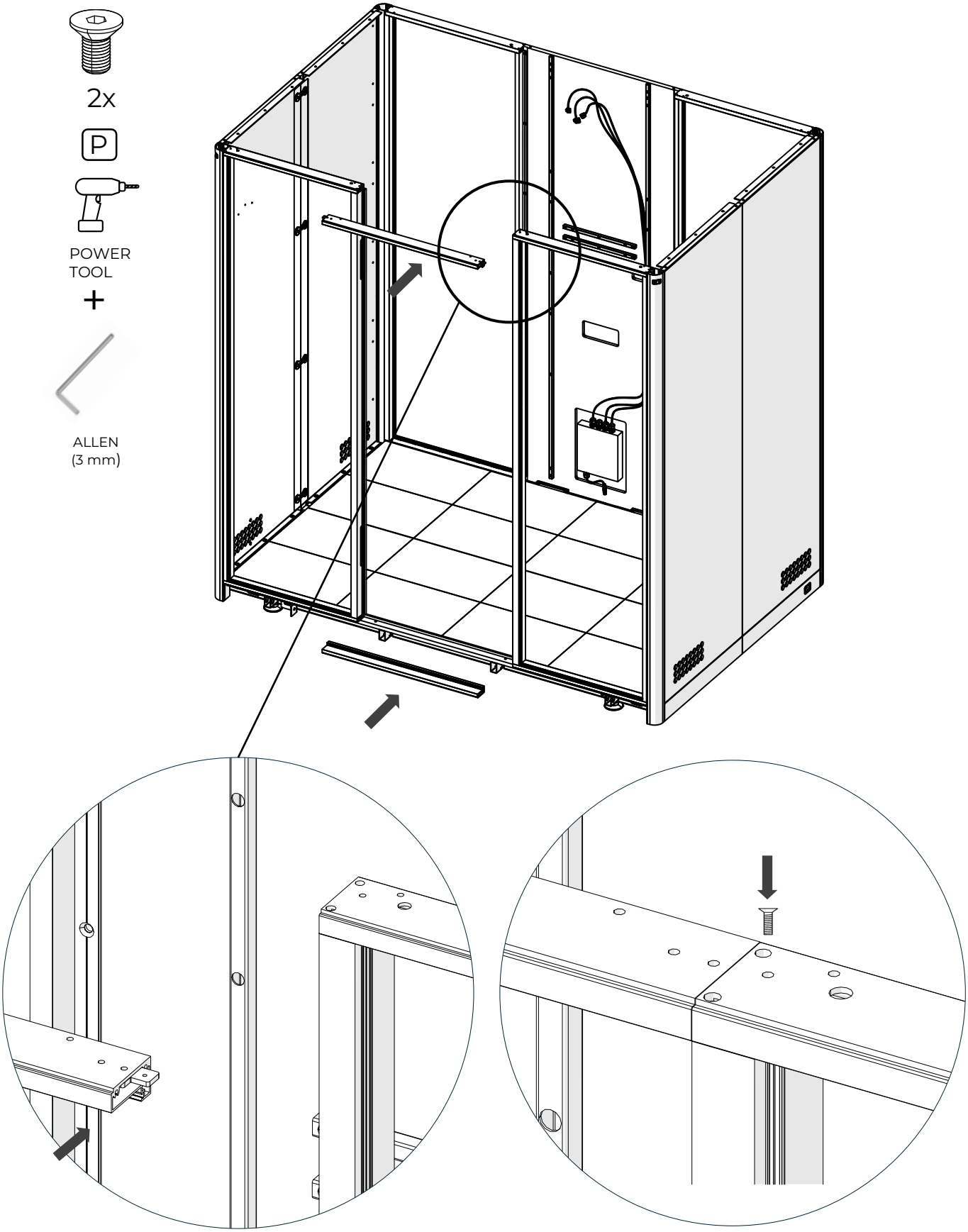

27.

2x

POWER TOOL

+

ALLEN (4 mm)

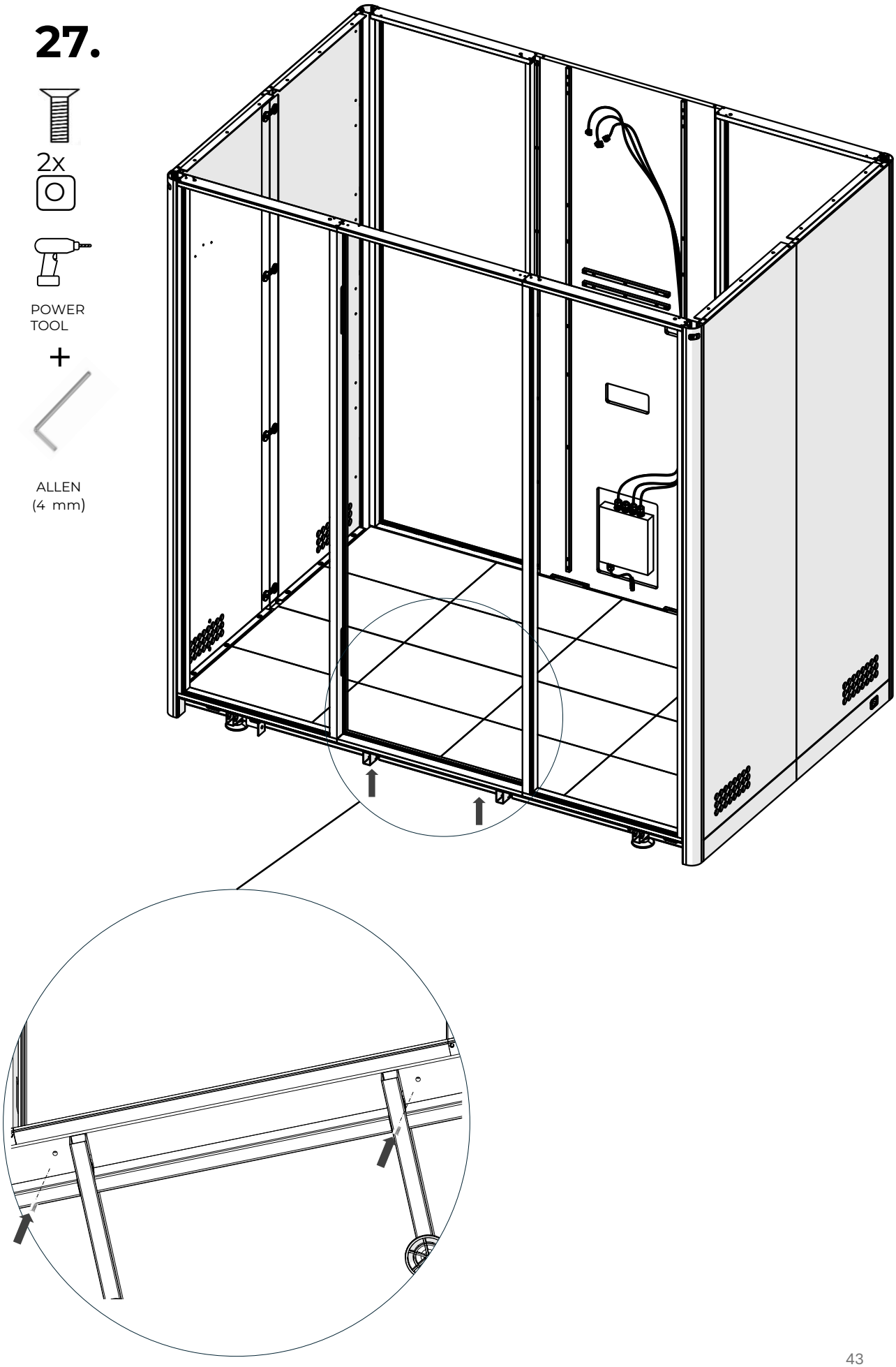

28.

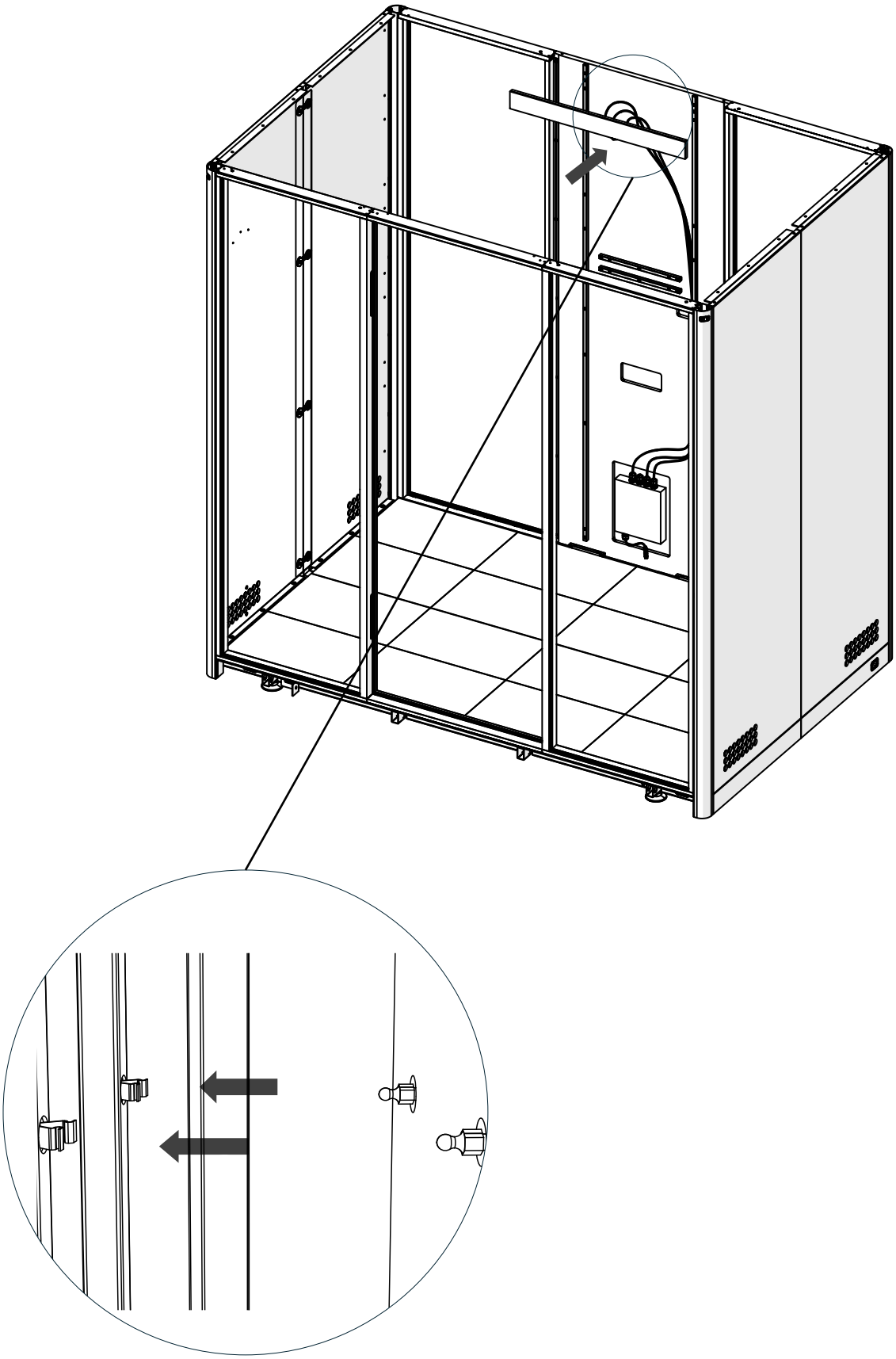

29.

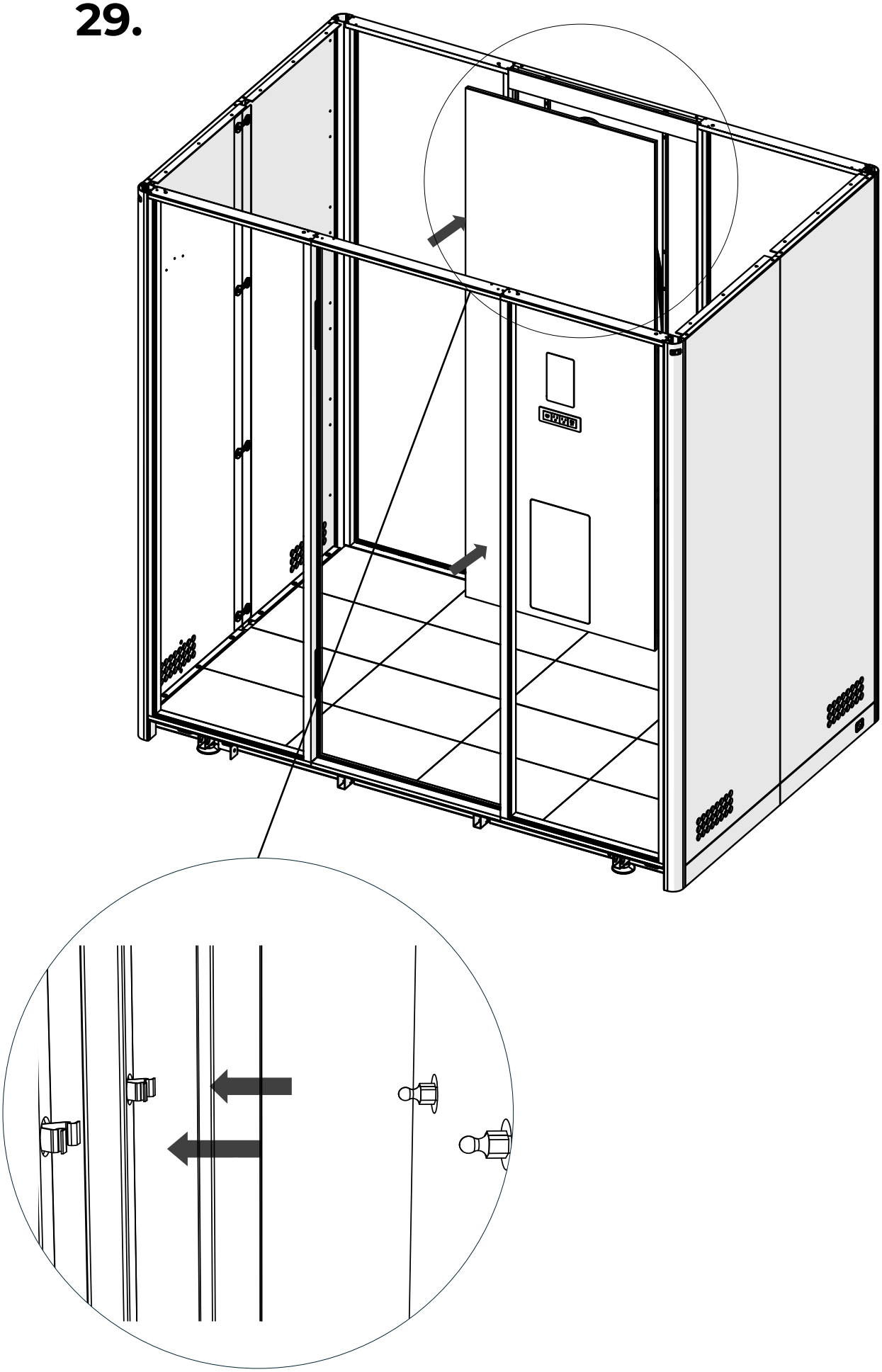

30.

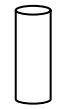

10x

G

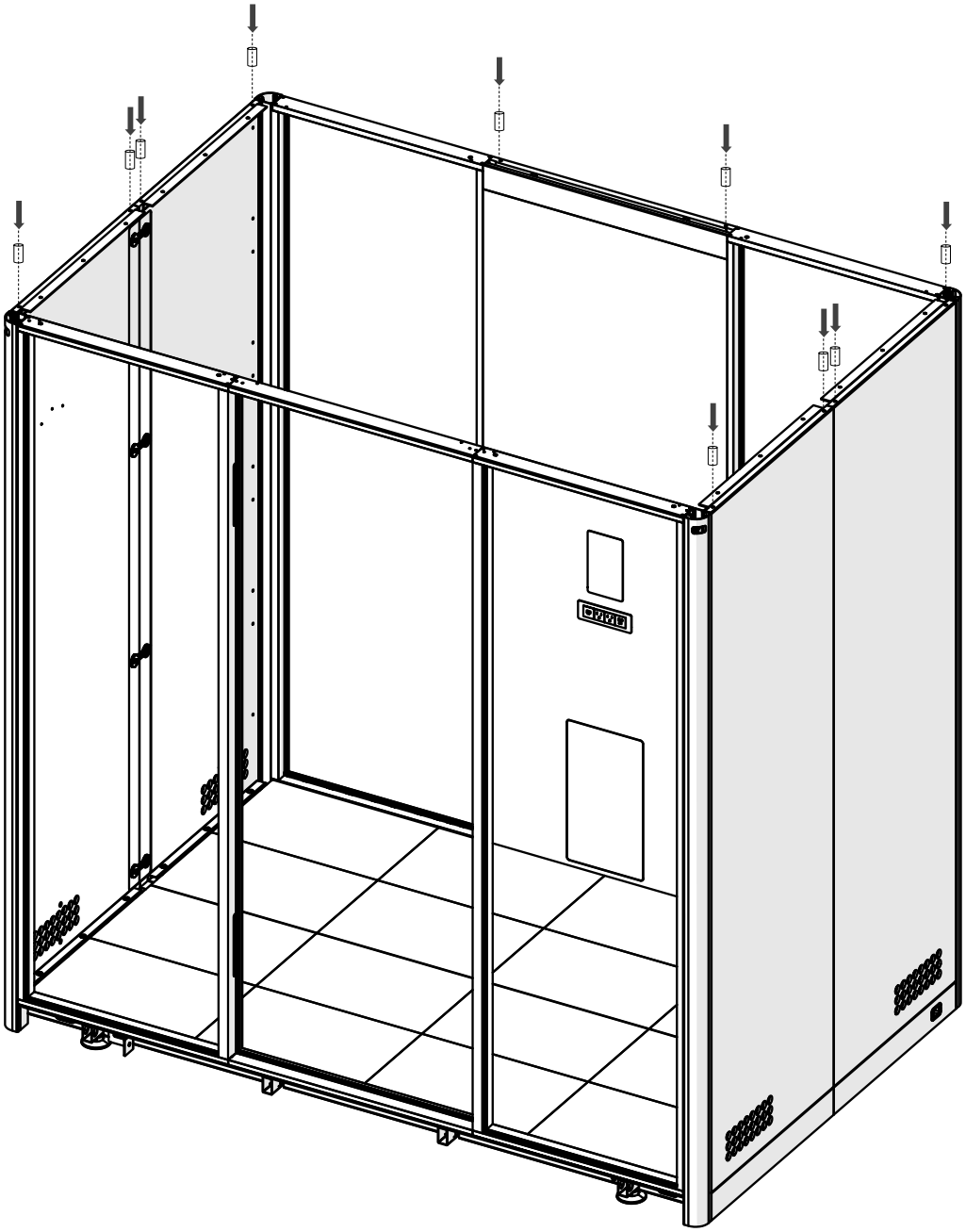

31.

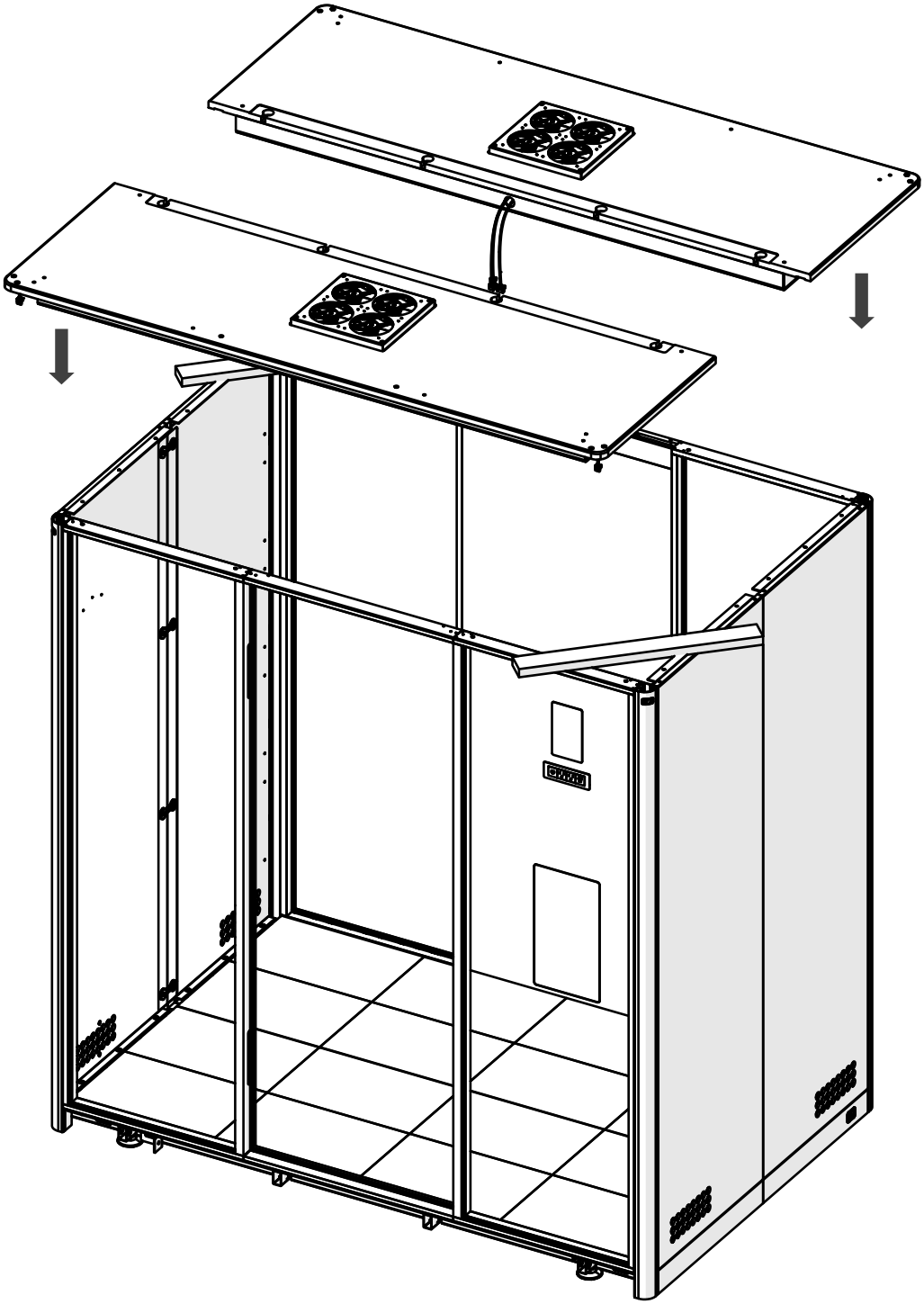

32.

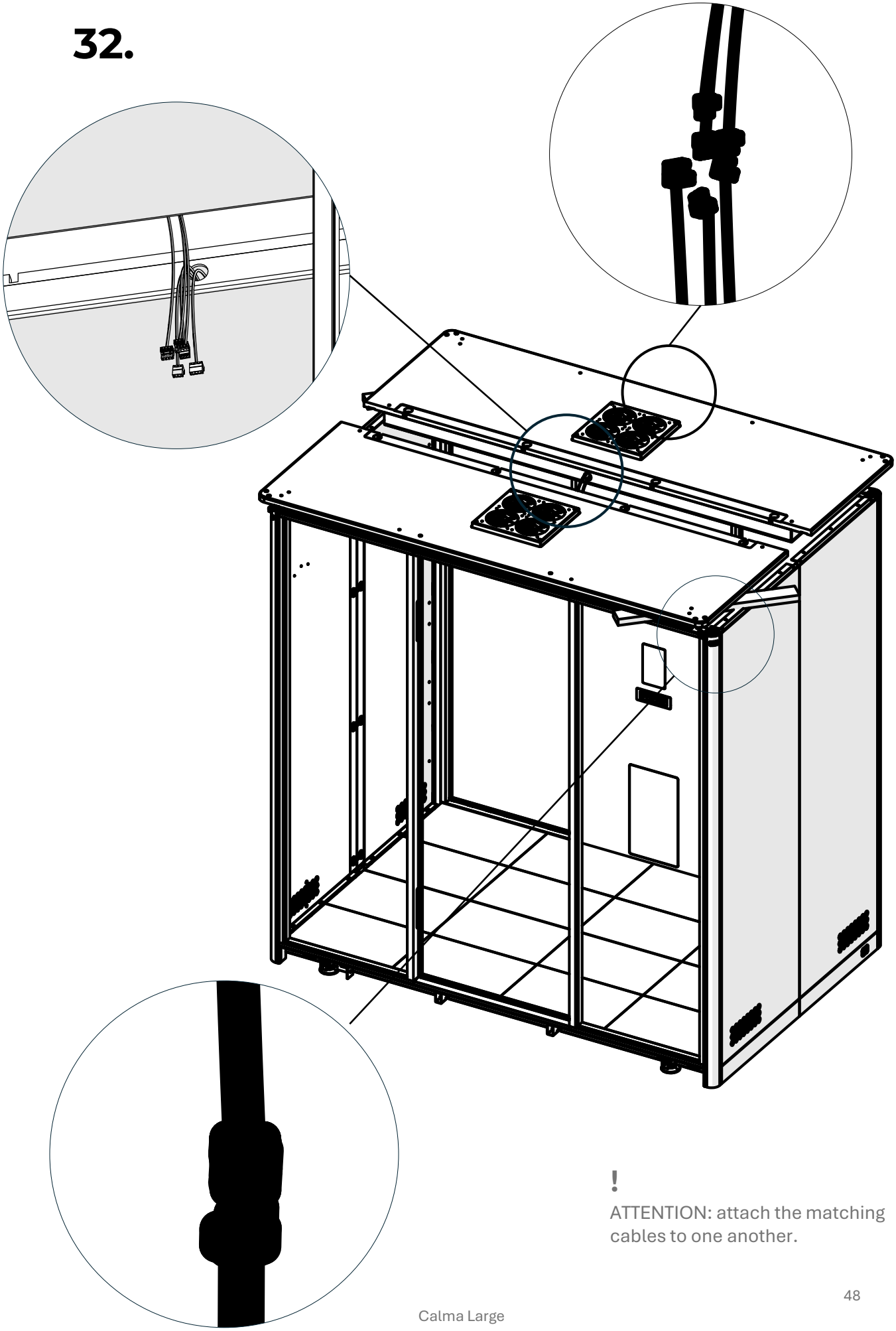

!

ATTENTION: attach the matching cables to one another.

33.

4x

A

4x

B

ALLEN
(6mm)

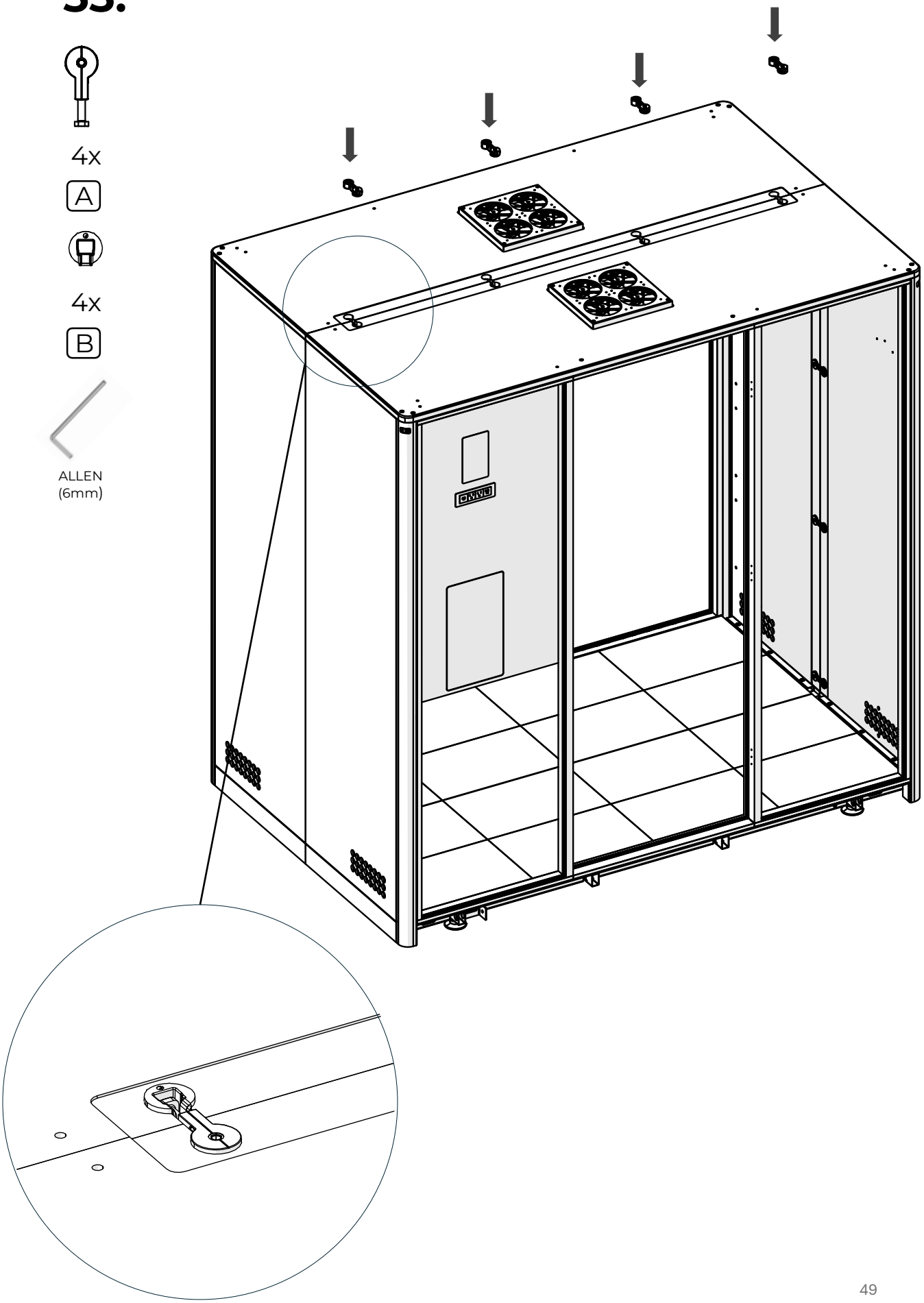

34.

10x

F

PHILLIPS
DRILL BIT

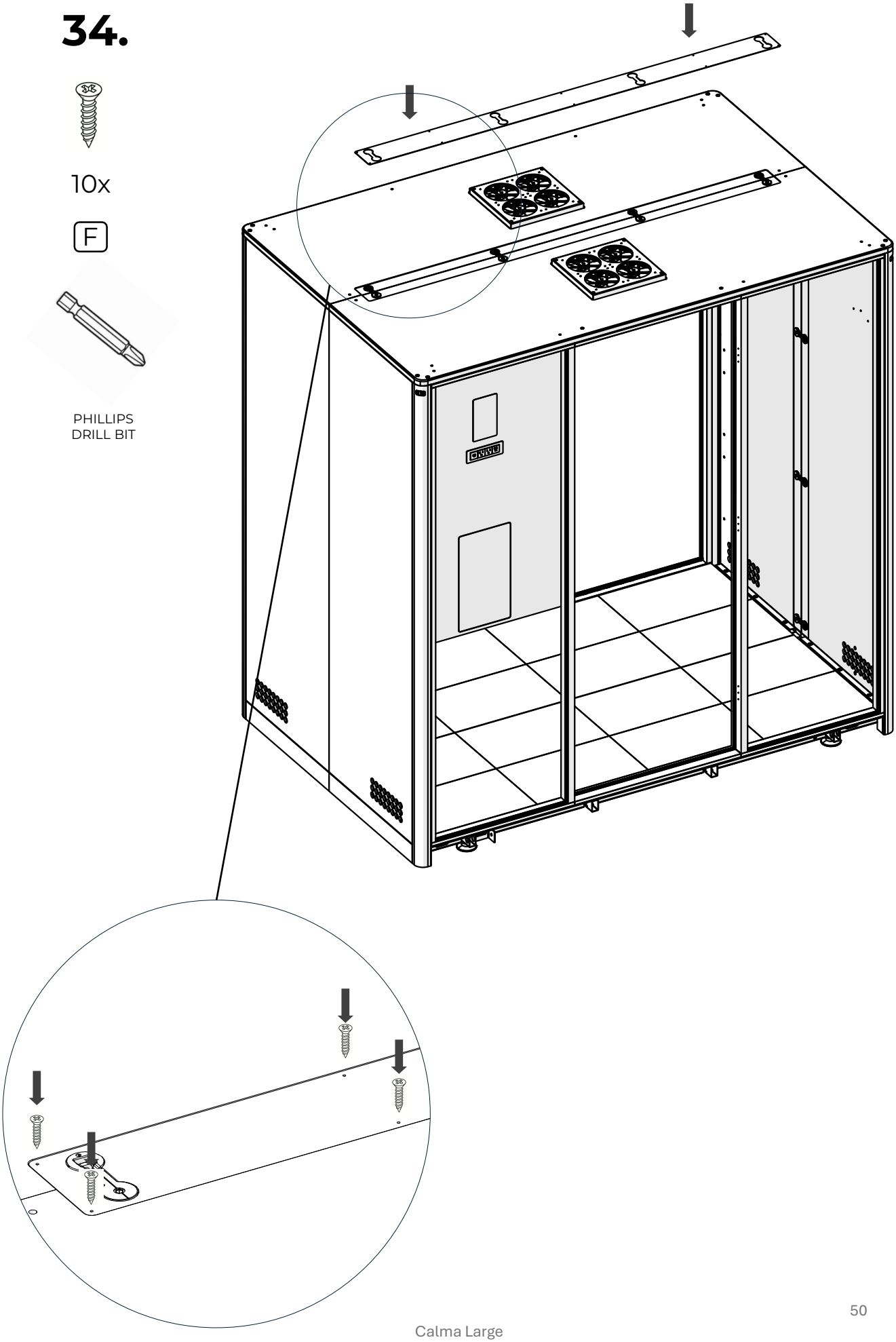

35.

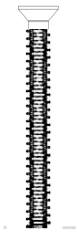

8x

H

POWER
TOOL

+

ALLEN
(6 mm)

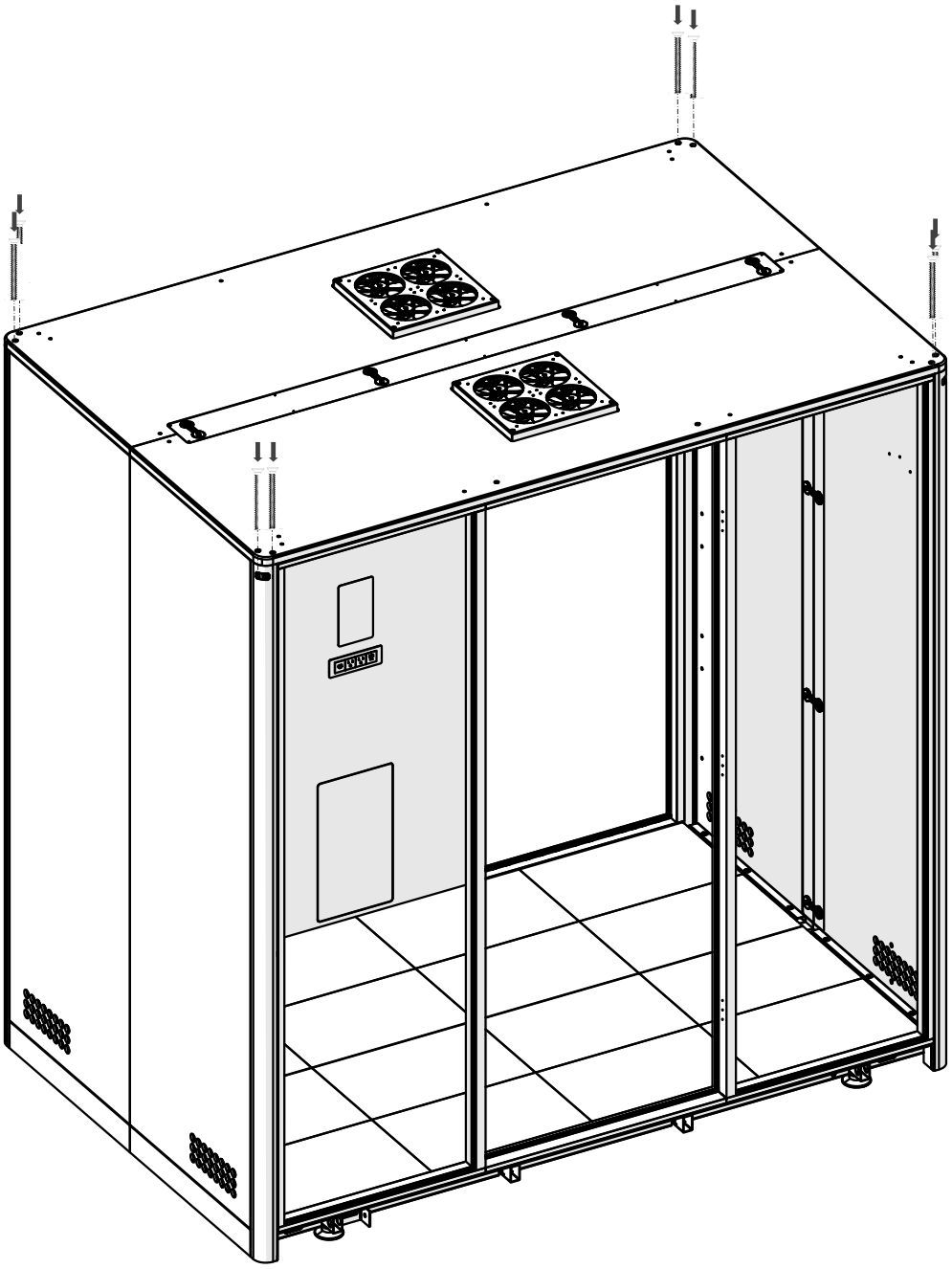

36.

10x

POWER
TOOL

+

ALLEN
(4 mm)

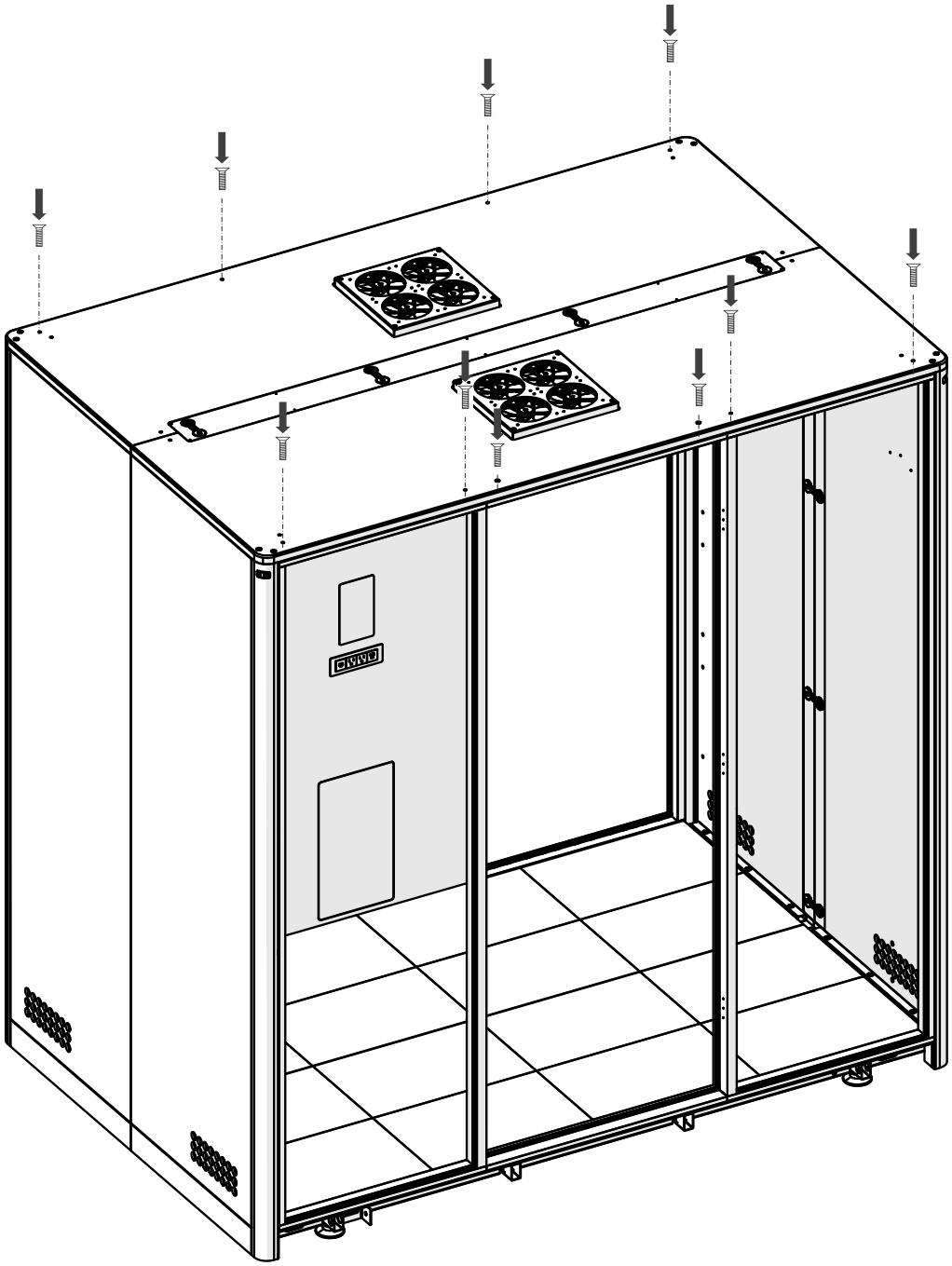

37.

22x

F

PHILLIPS
DRILL BIT

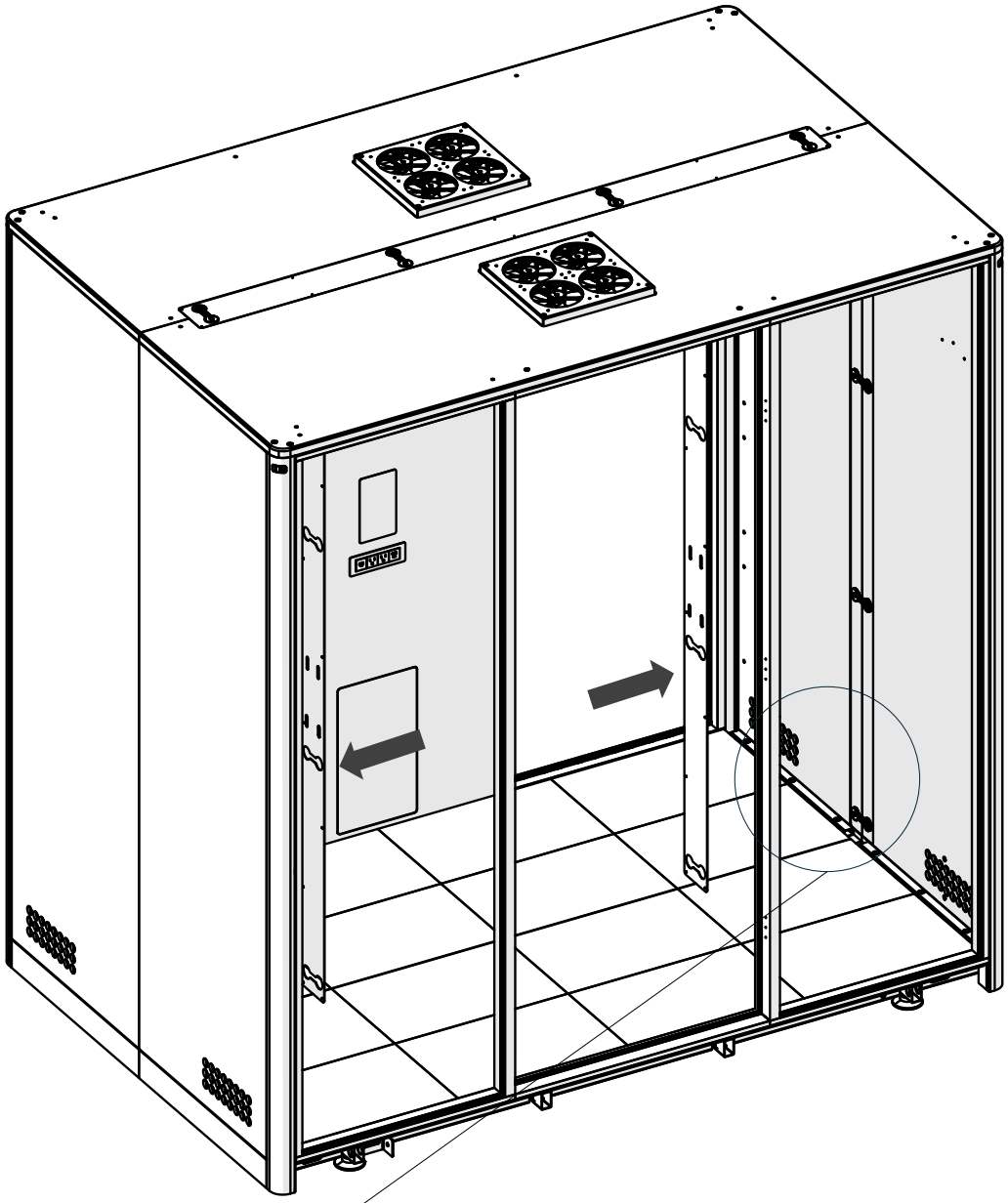

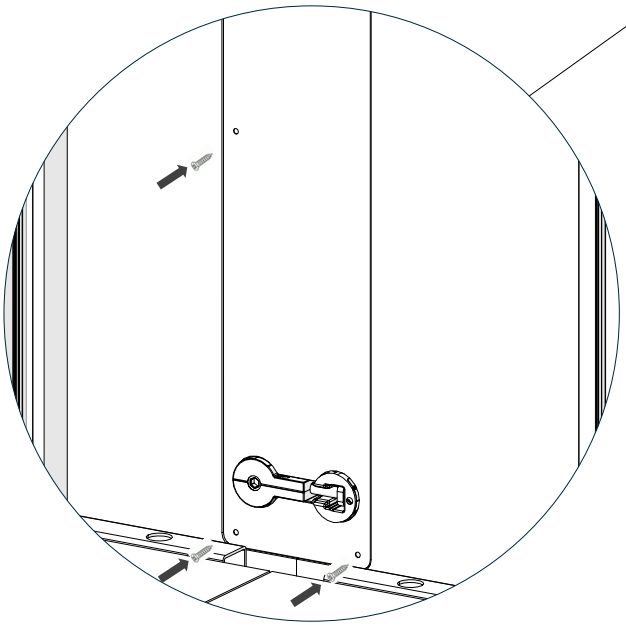

! Do this for both side.

38.

12X

E

POWER
TOOL

+

ALLEN
(4 mm)

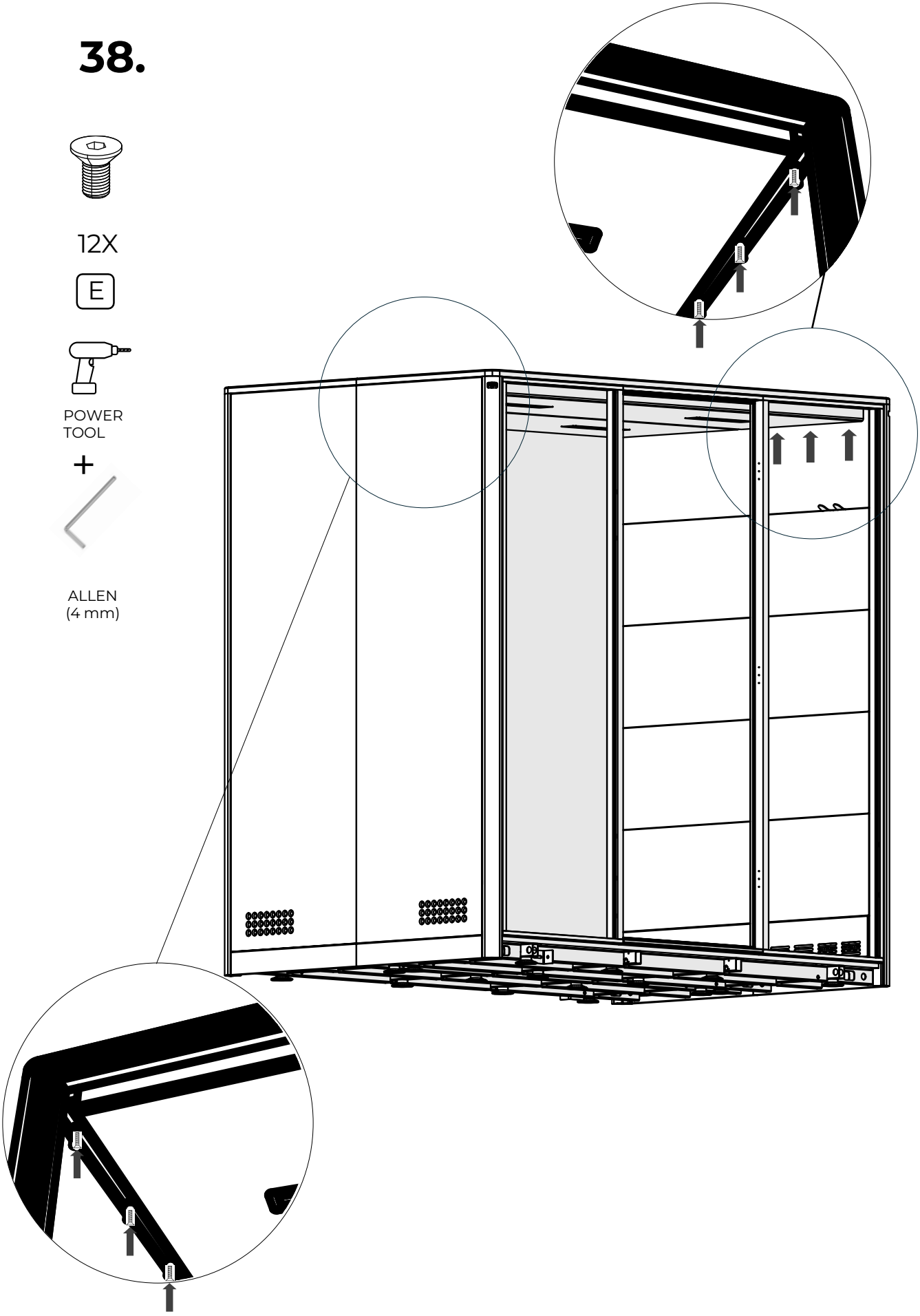

! Do this for both side.

39.

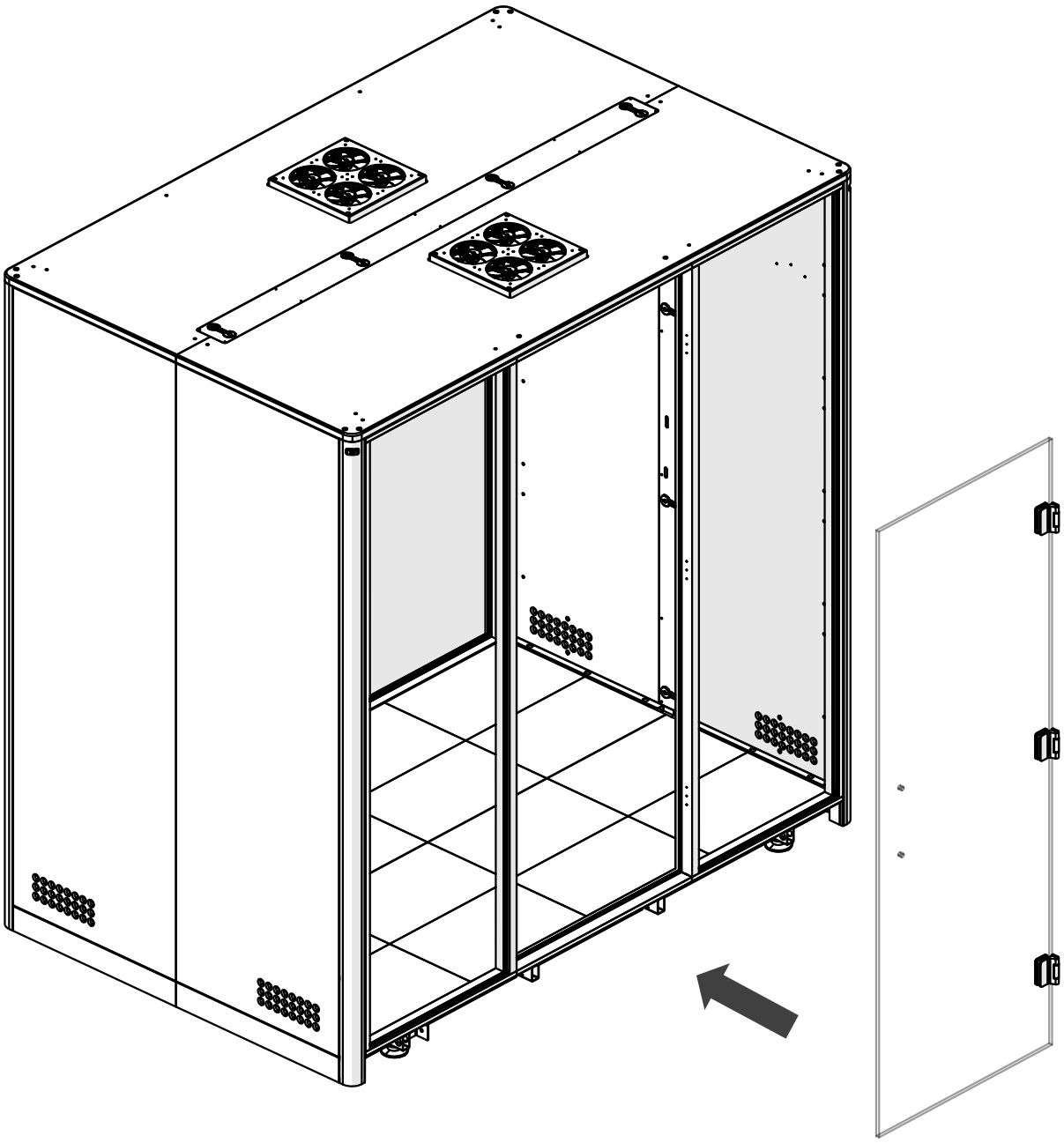

40.

5X16 HEX SOCKET
BUTTON HEAD BOLT

9x

K

6x

L

ALLEN
(2.5 / 3 mm)

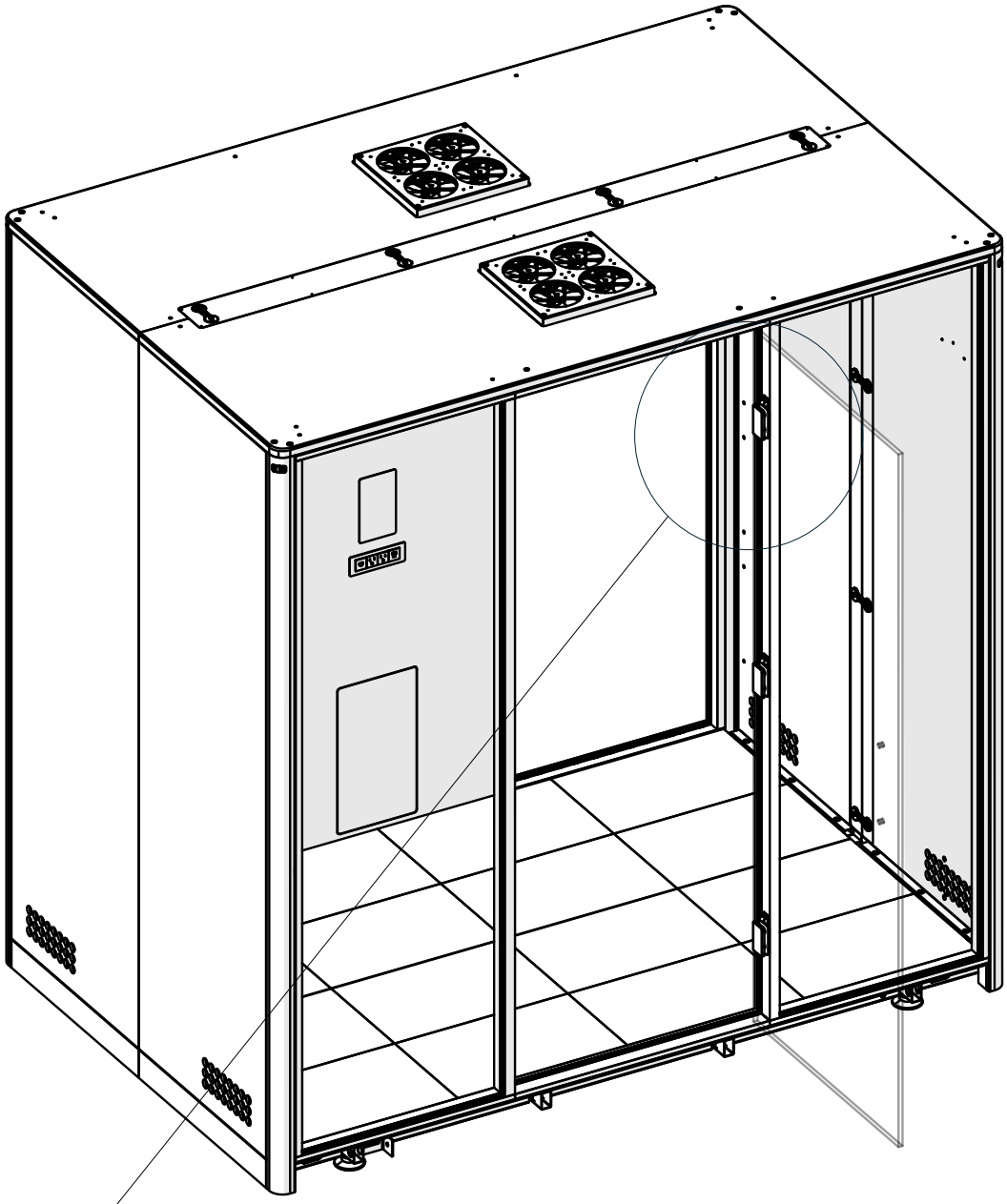

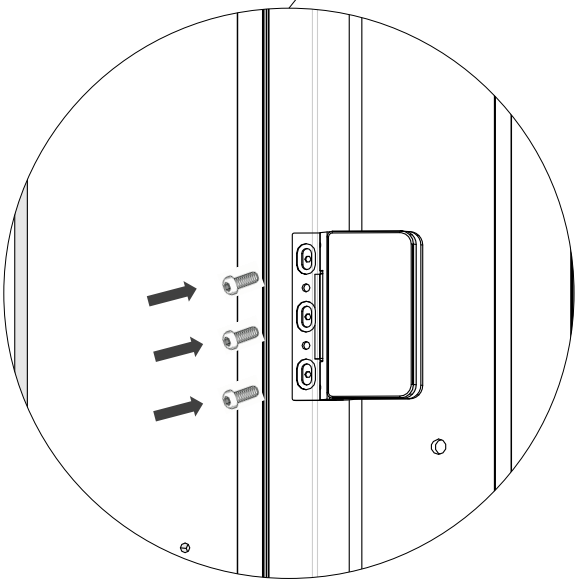

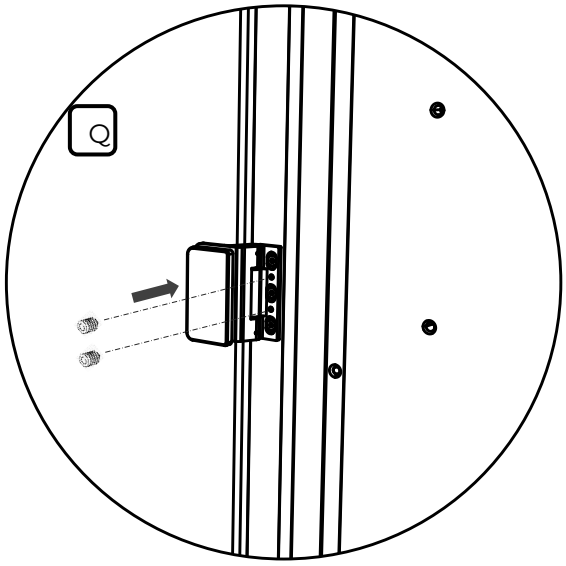

41.

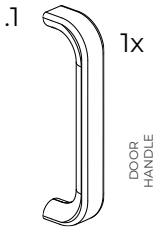

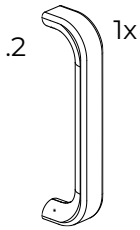

2x

M

ALLEN KEY
(6 / 2,5 mm)

2x

M

2x

M

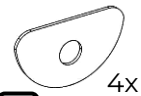

4x

M

2x

M

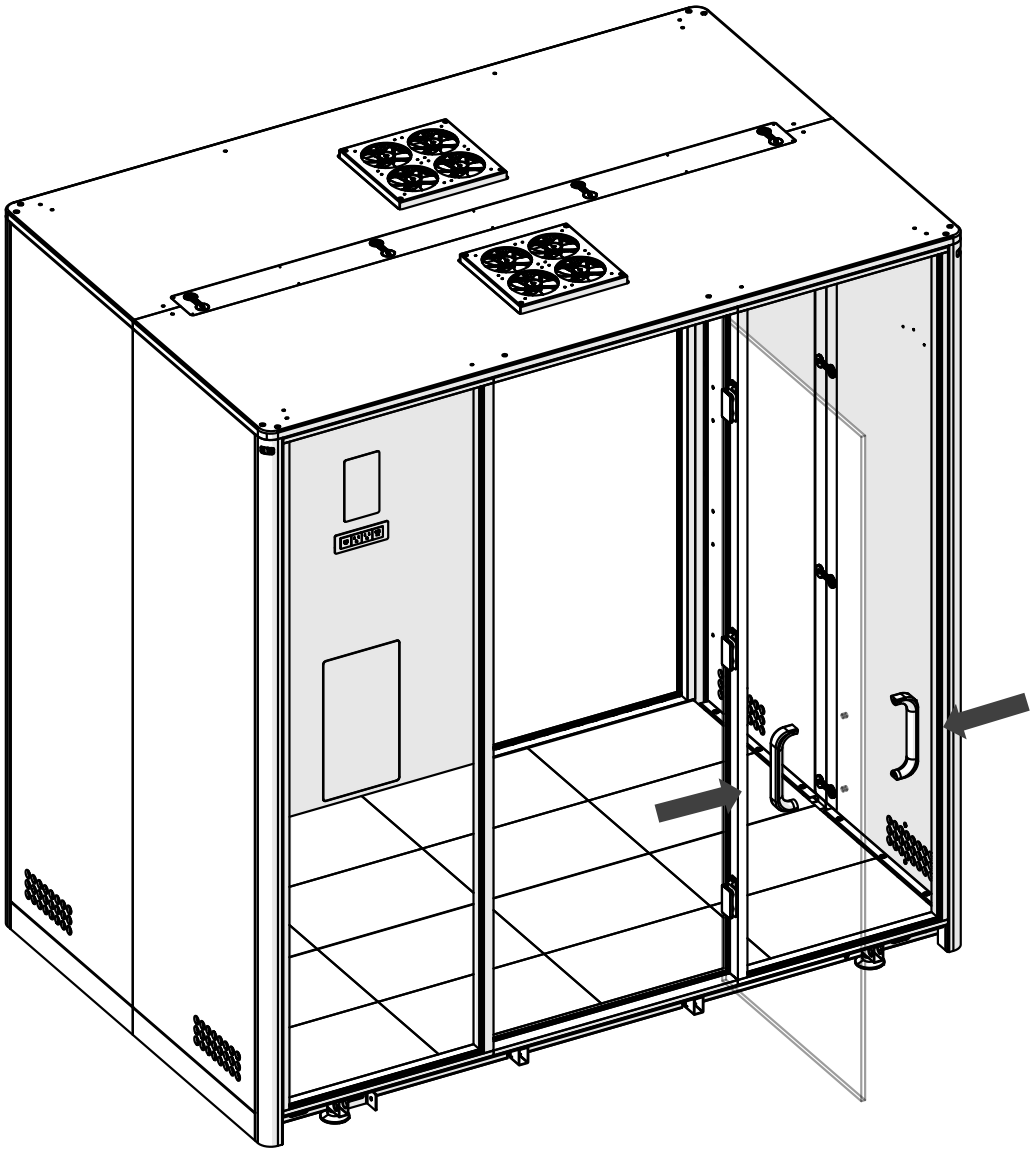

42.

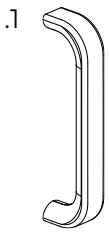

.1 1x

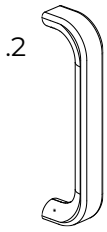

.2 1x

2x

U

ALLEN KEY
(6 / 2,5 mm)

M 2x

M 2x

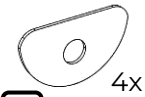

M 4x

M 2x

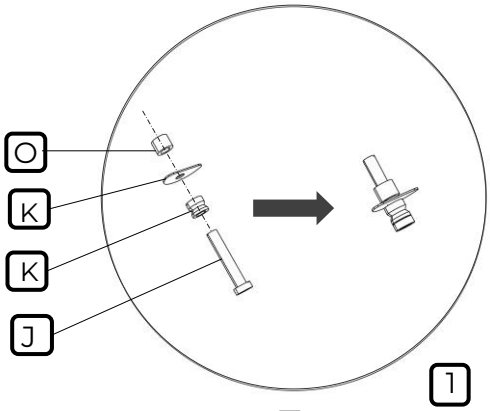

2x

1

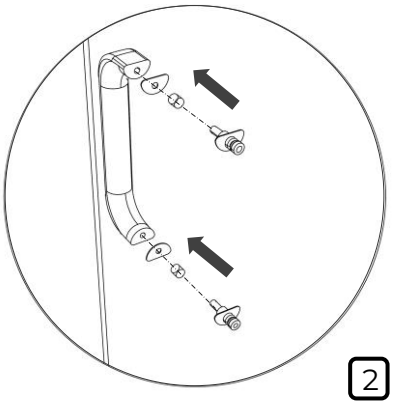

2

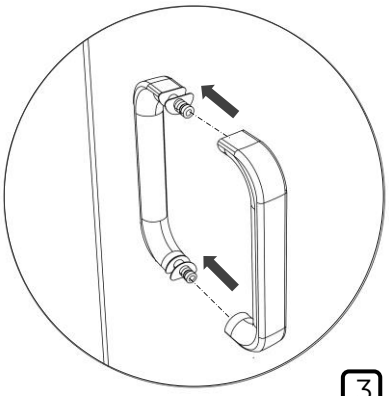

3

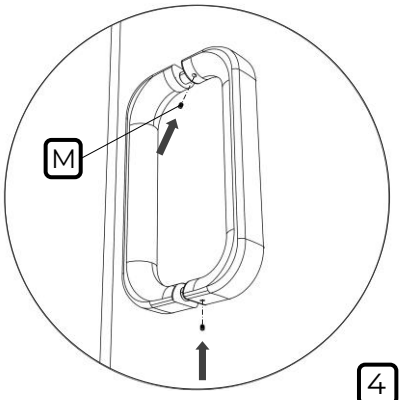

4

43.

6x

W

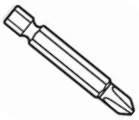

PHILLIPS
DRILL BIT

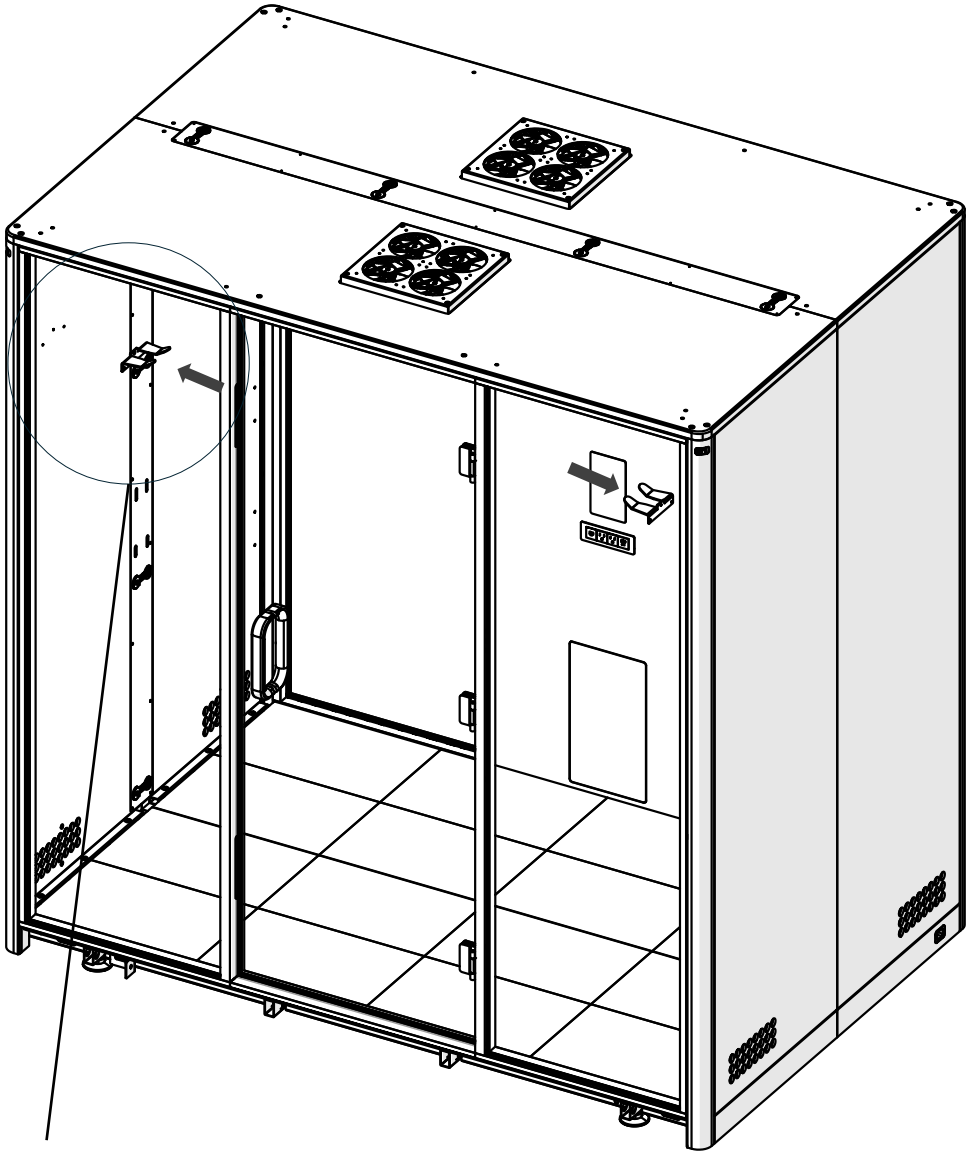

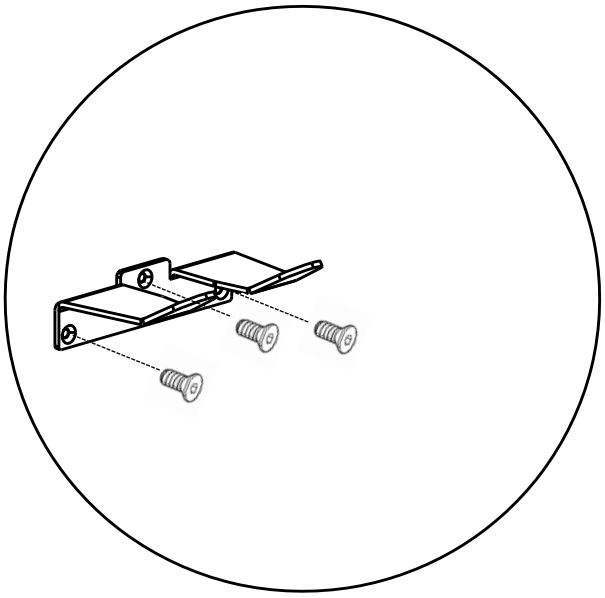

! Do this for both side.

44.

8x

Q

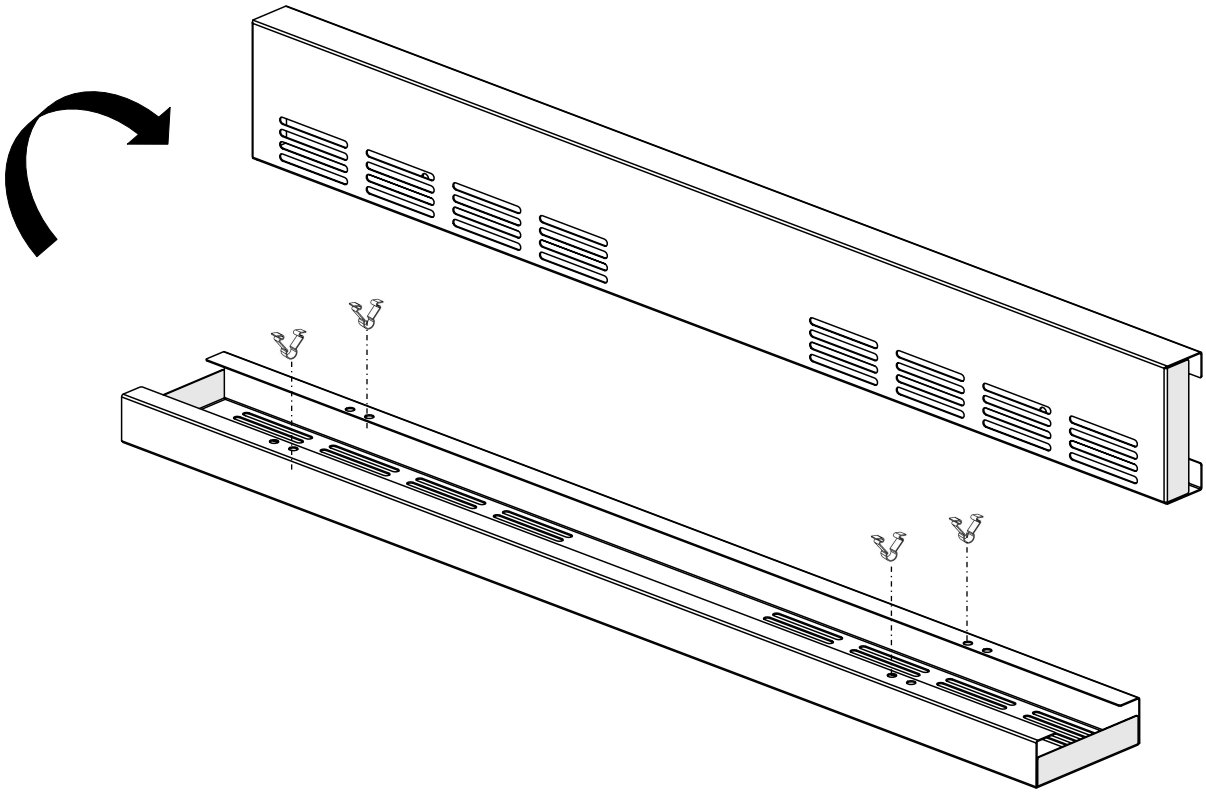

! Please install the kickplates to both right and left walls.

45.

RAPID PIN

8x

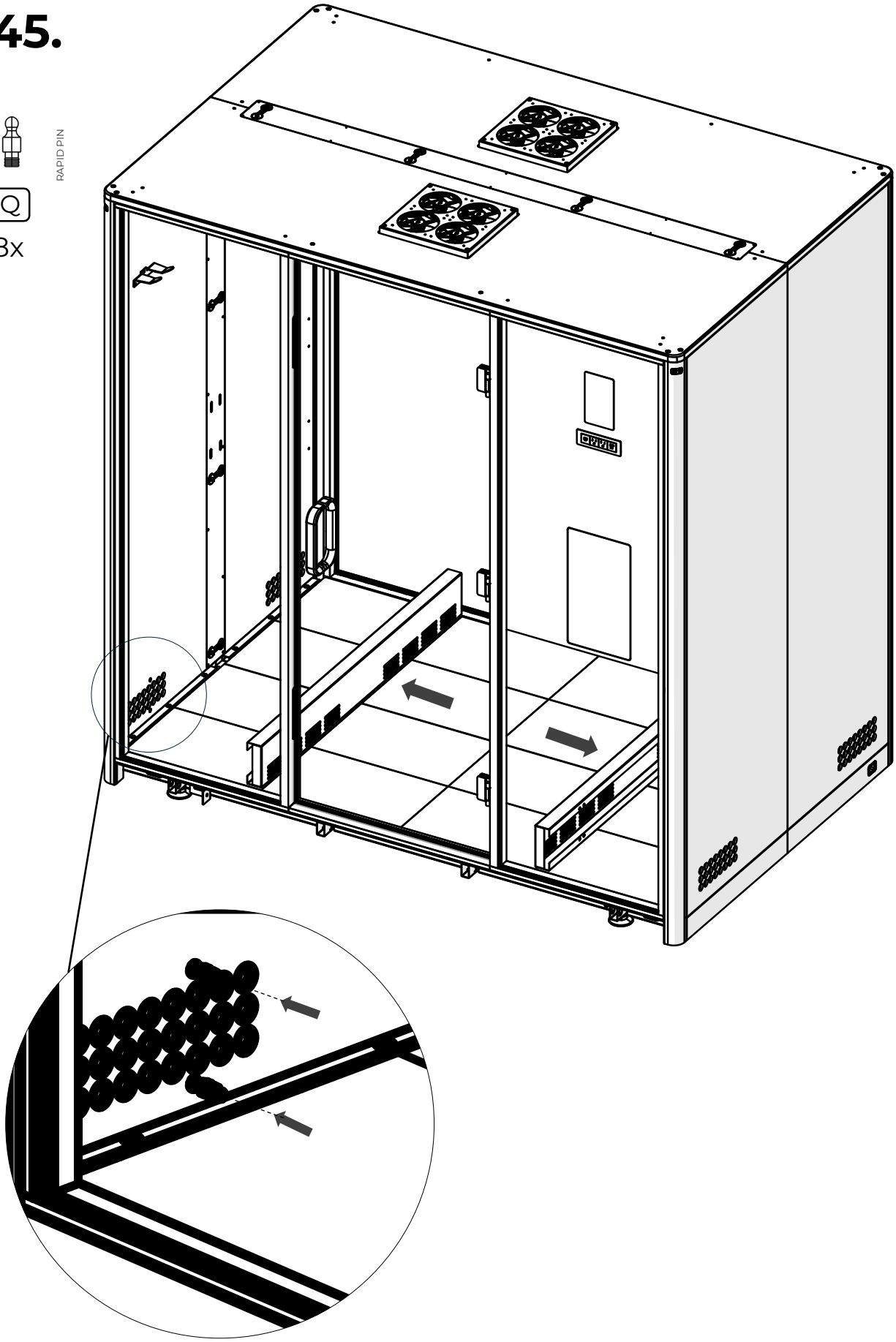

46.

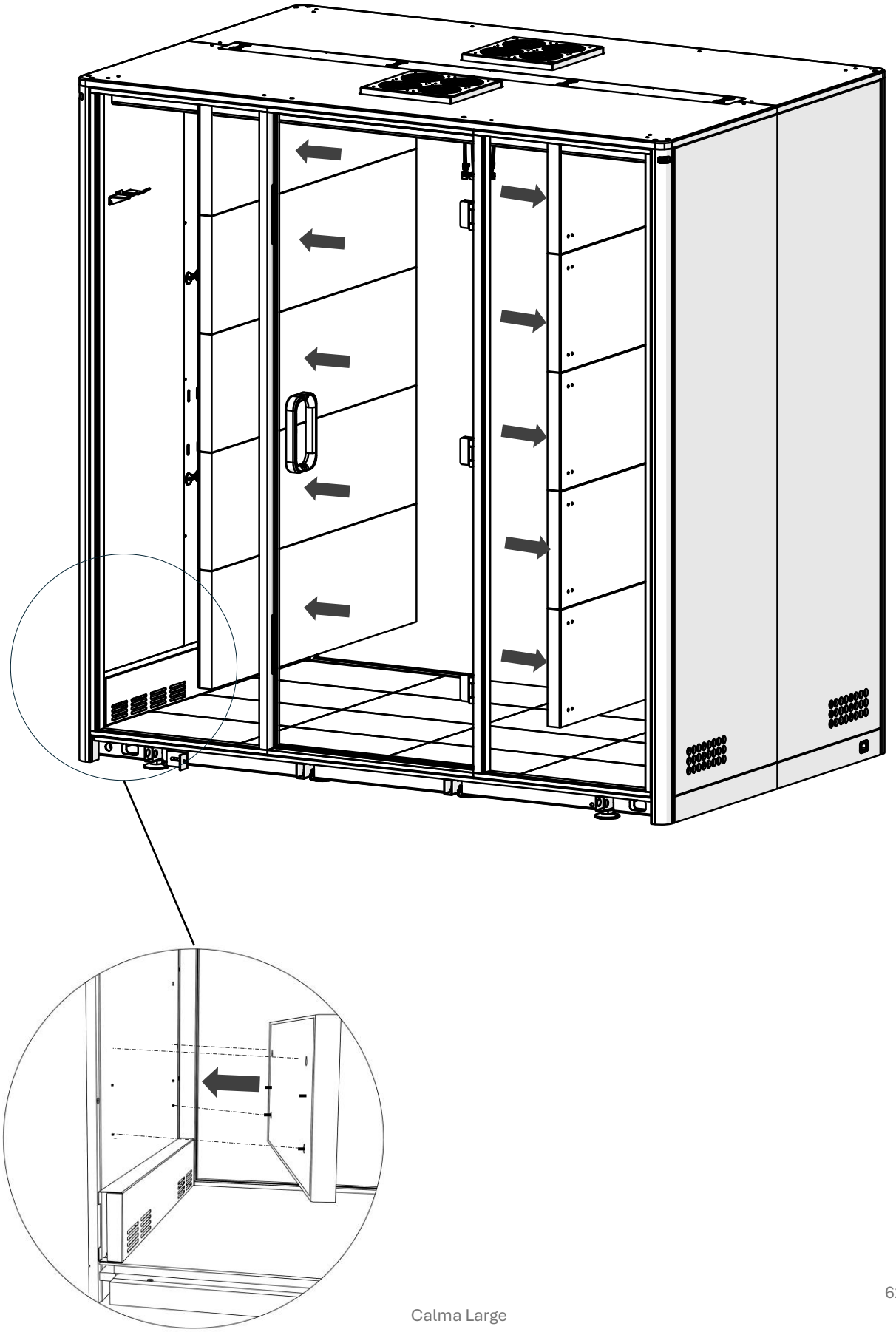

47.

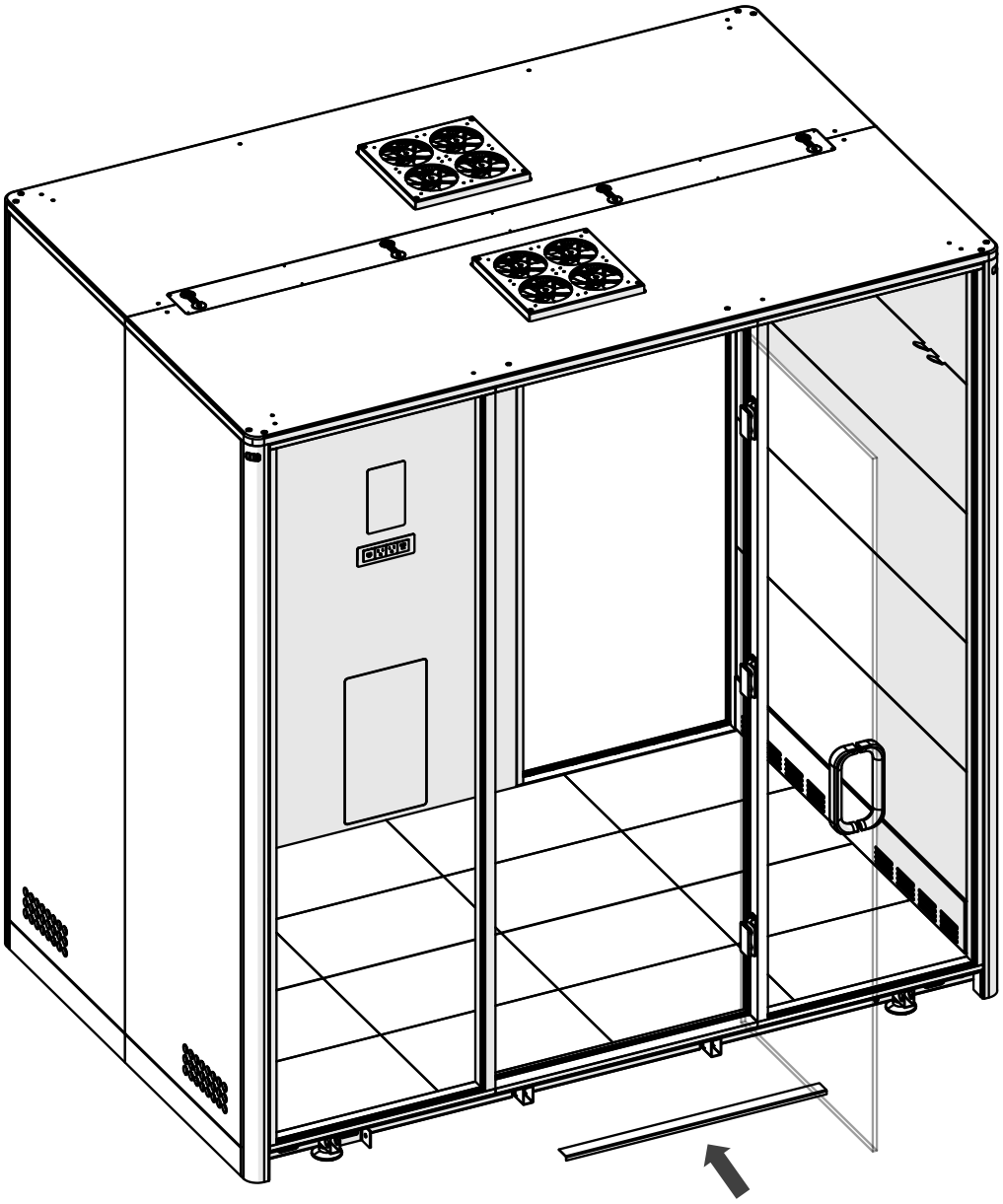

Remove the tapes from the bottom of the nameplate and place it on the door profile with the tapes facing downwards.

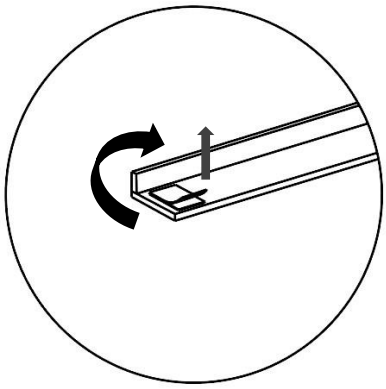

48.

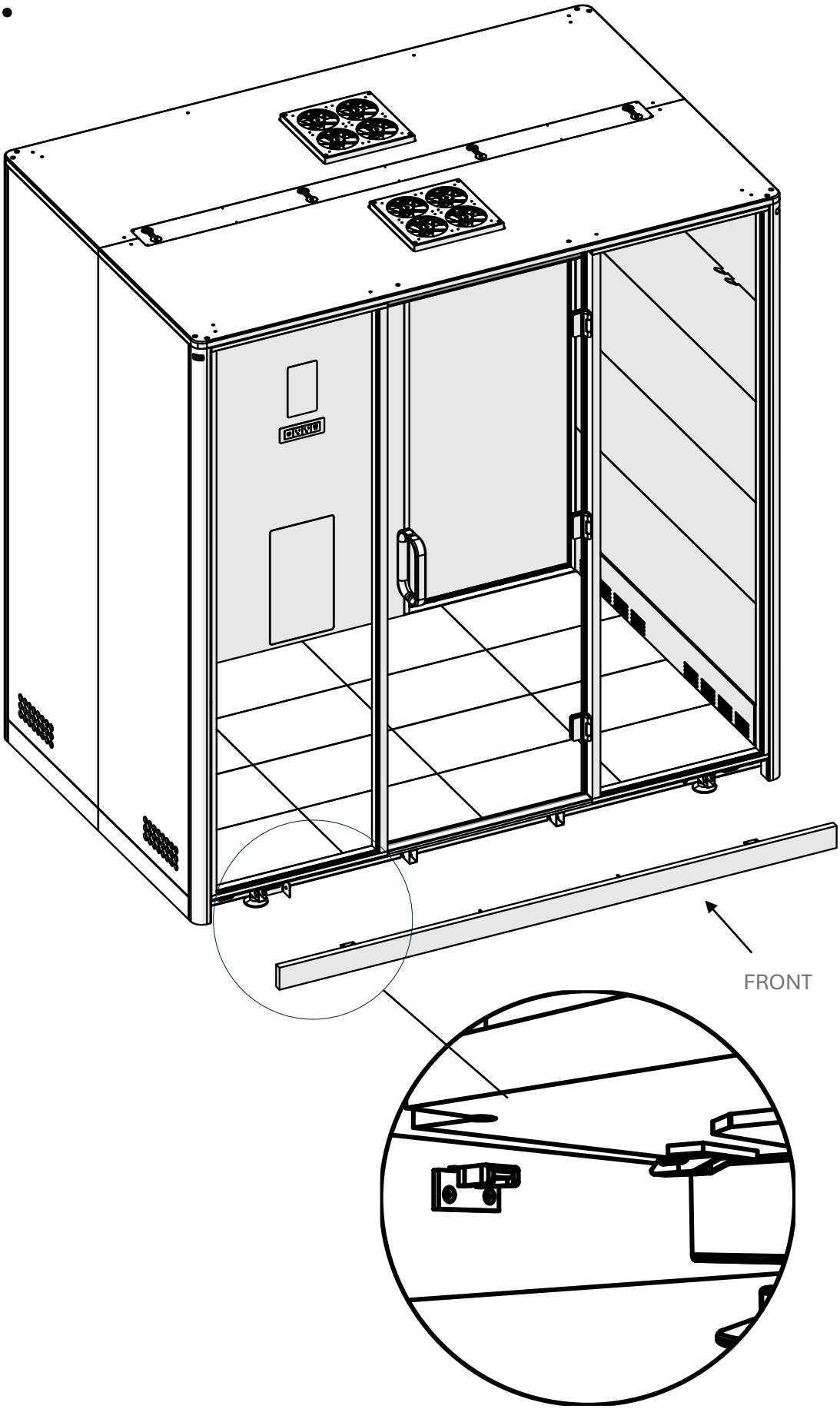

49.

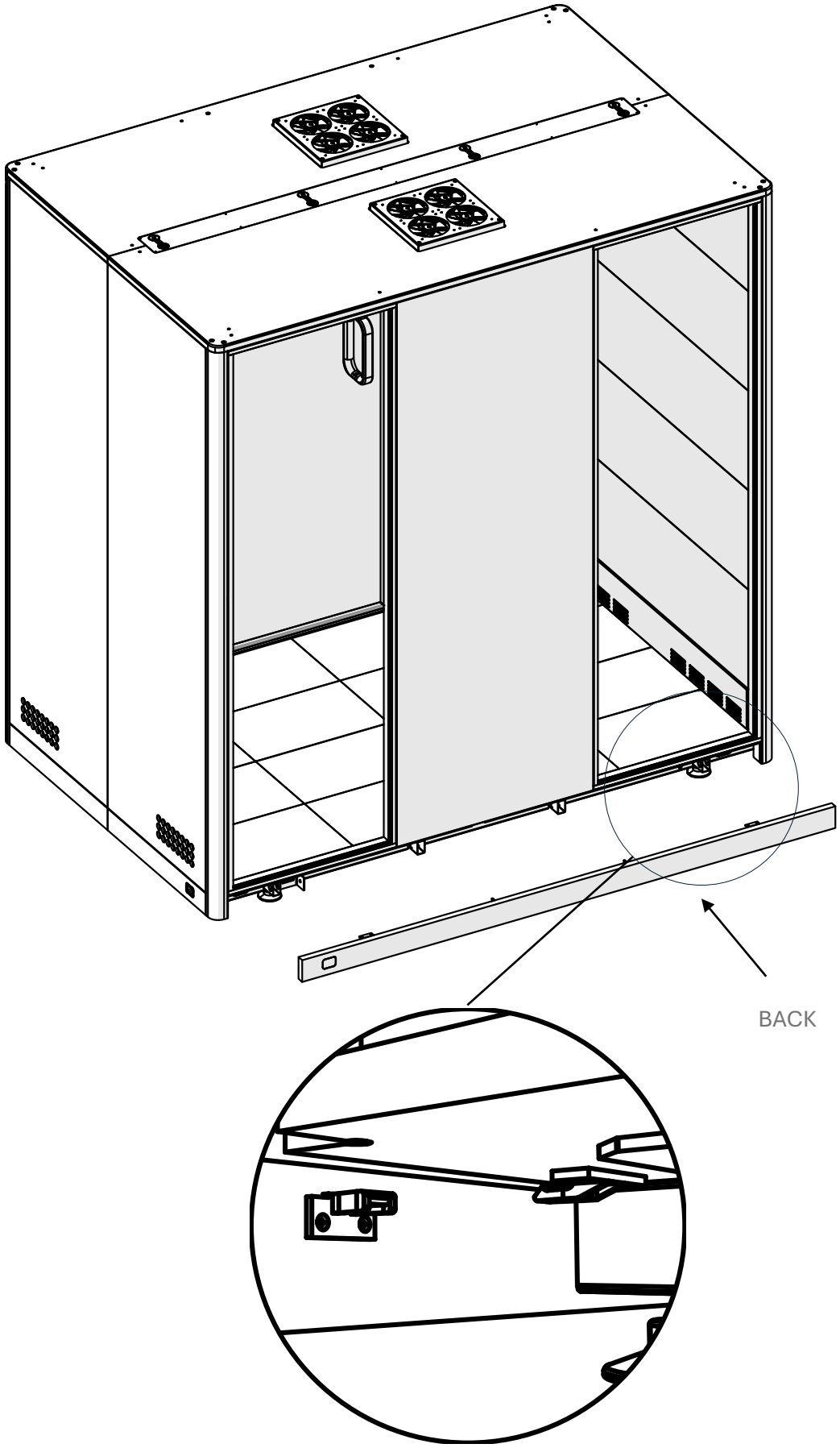

7 – Tau Desk Installation

1.

1x

T

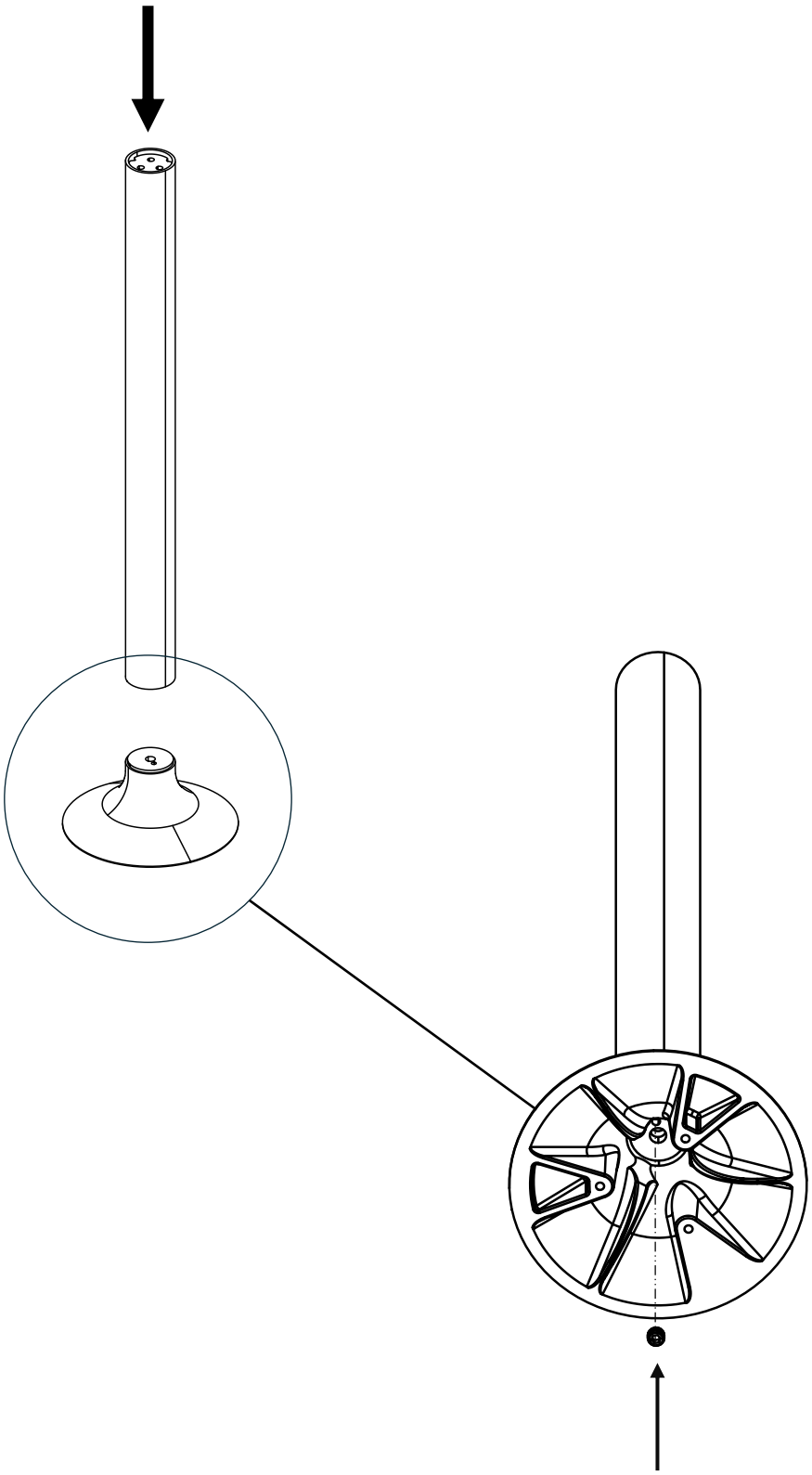

2.

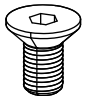

3x

T

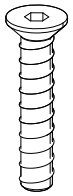

1x

T

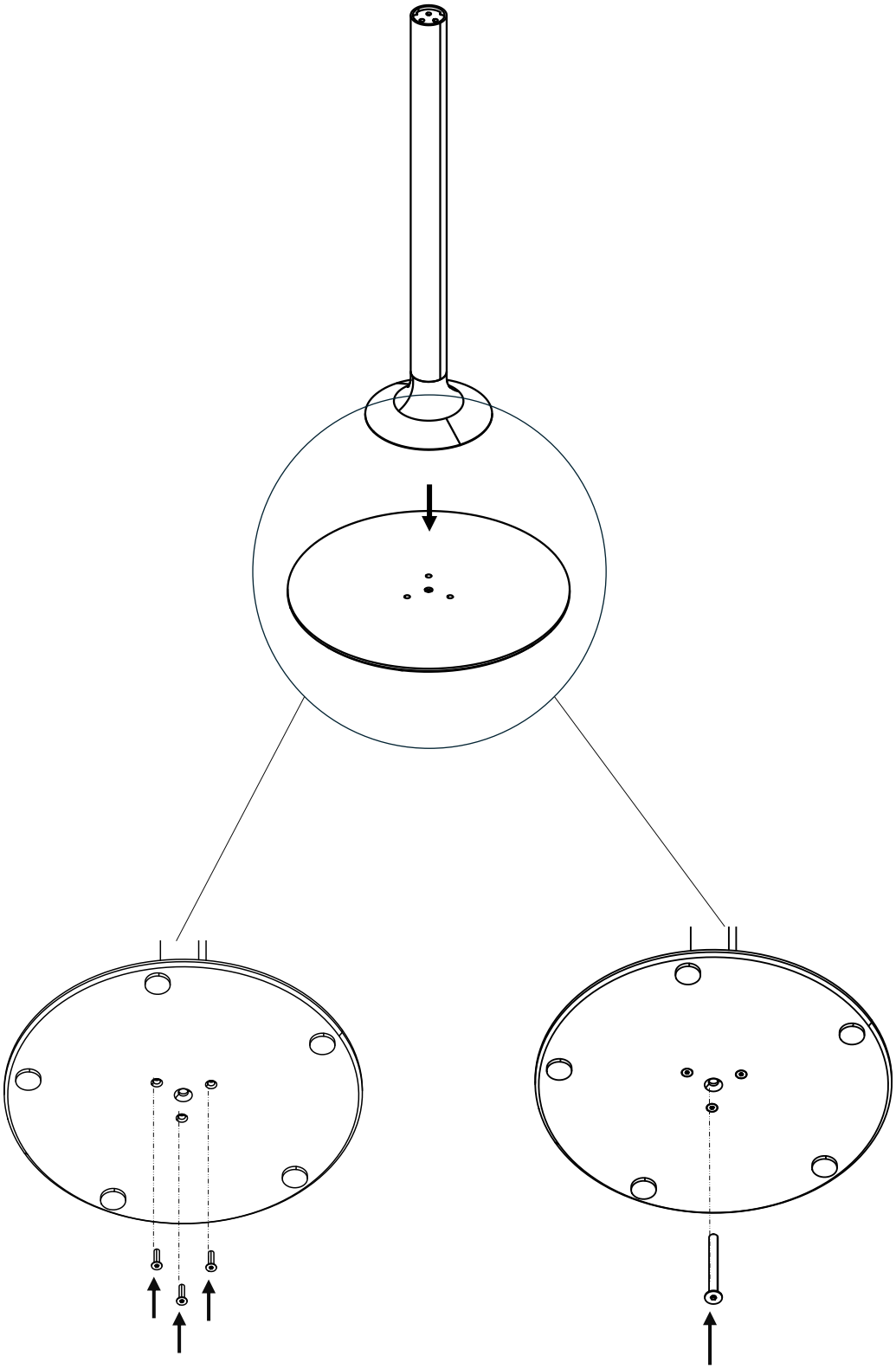

3.

3x

T

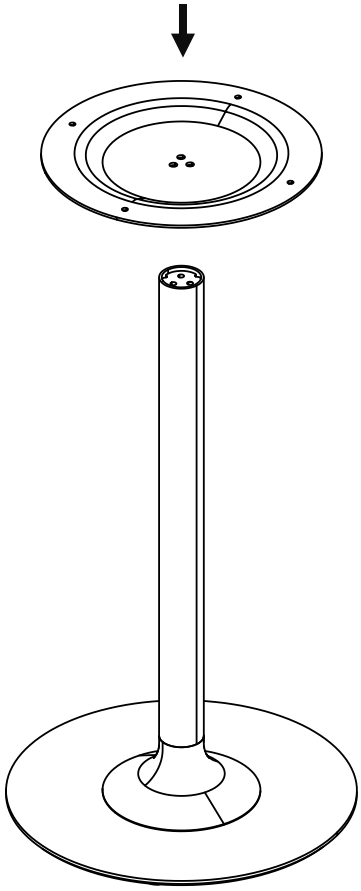

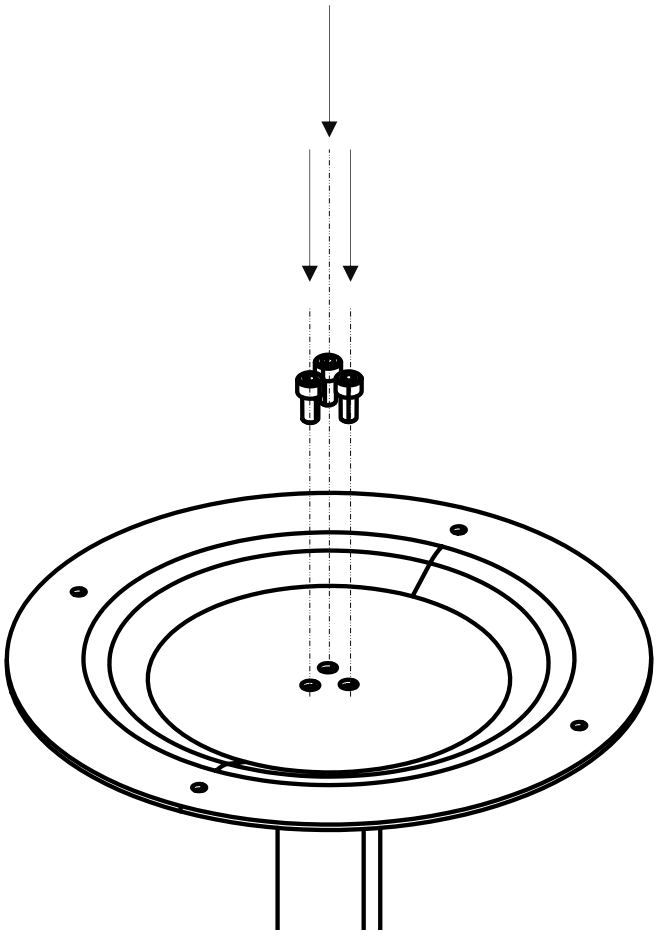

4.

4x

T

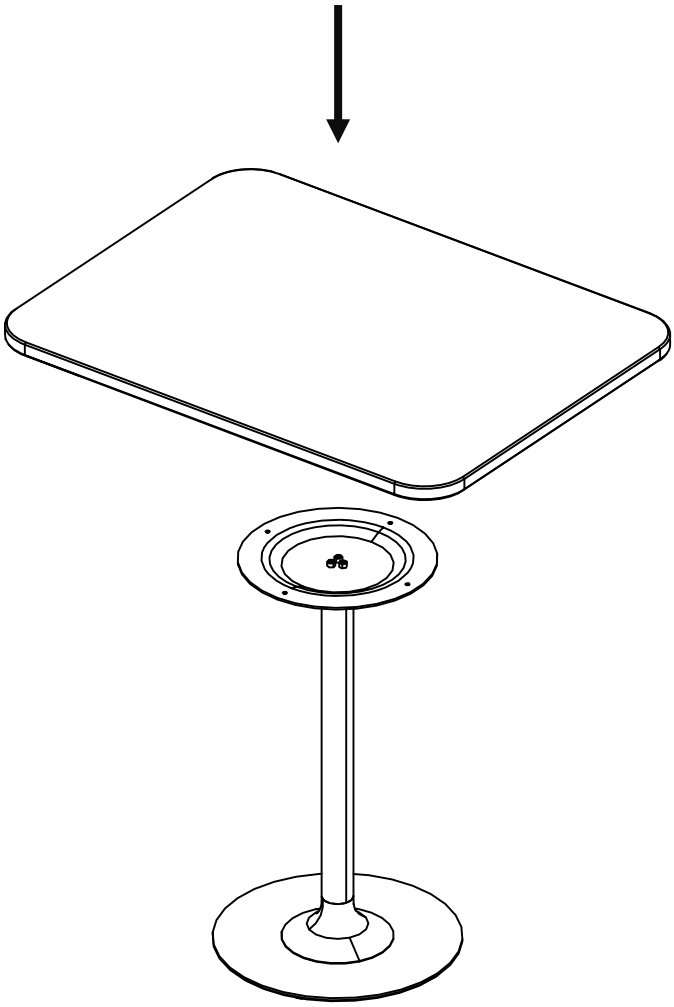

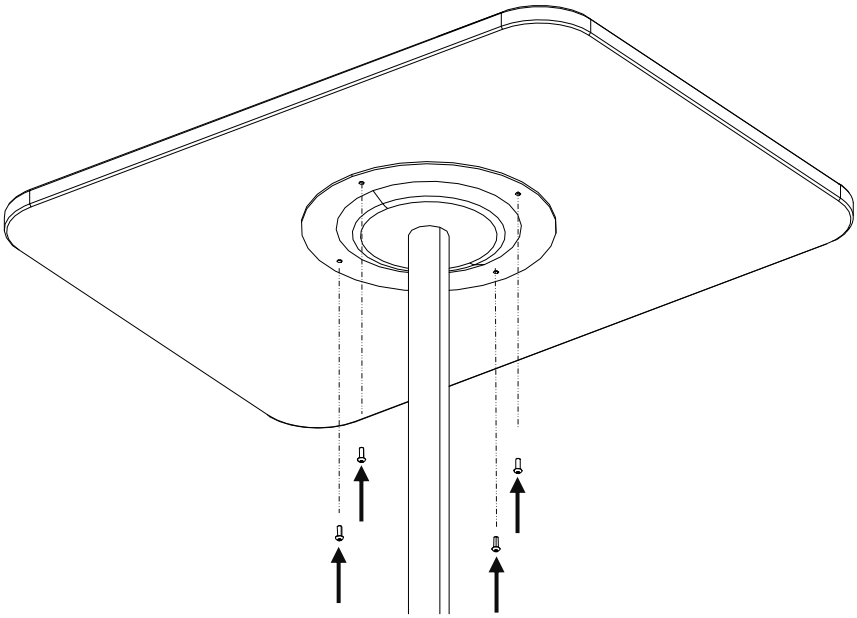

5.

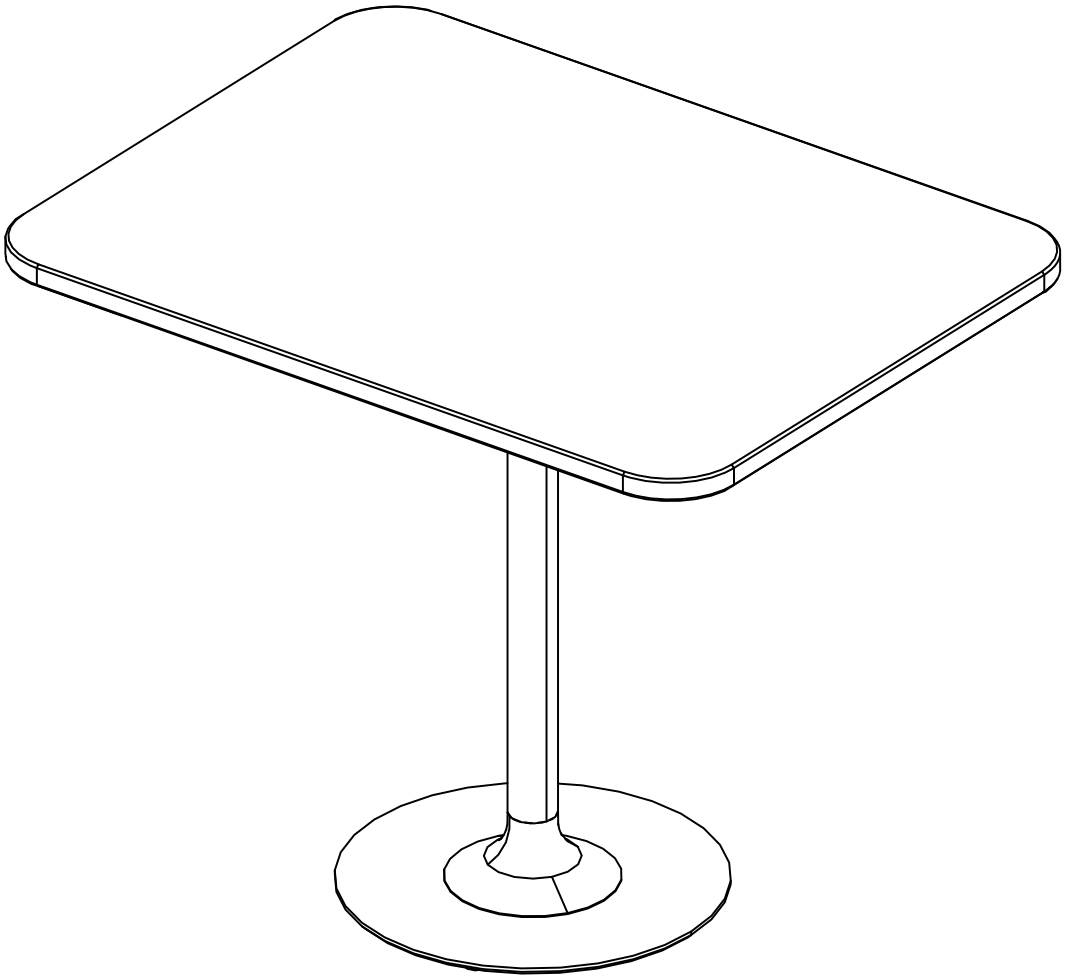

8 – In Case you Need to Adjust the Hinges

1.

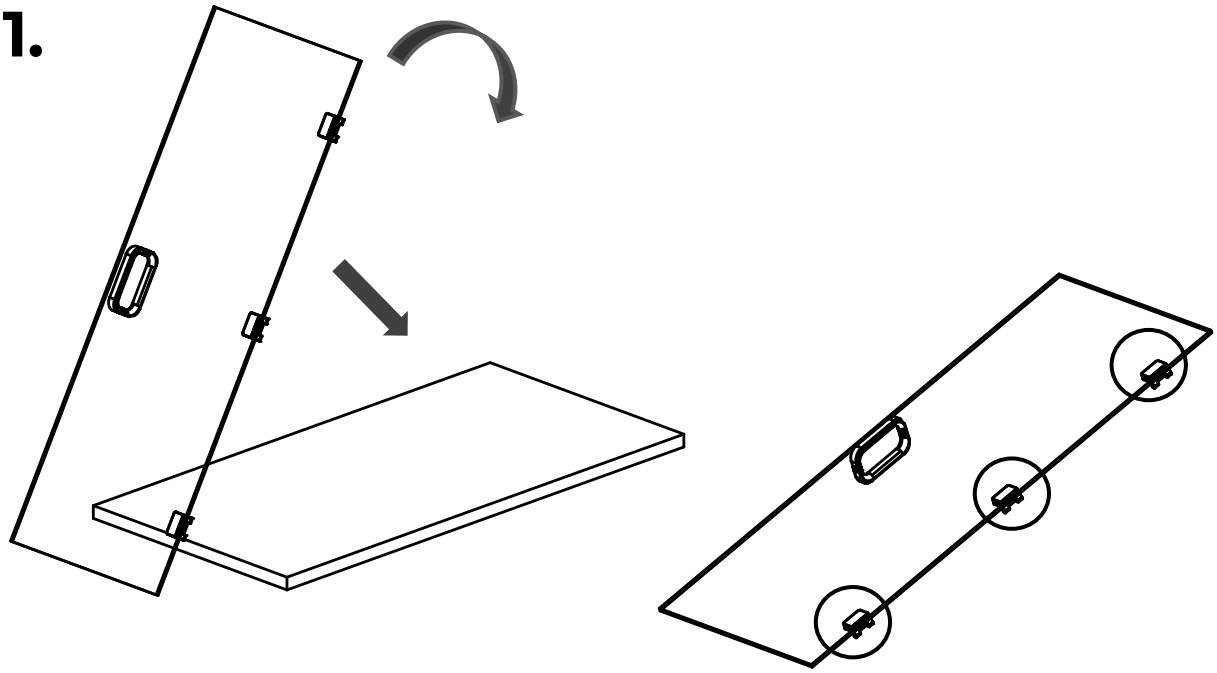

2.

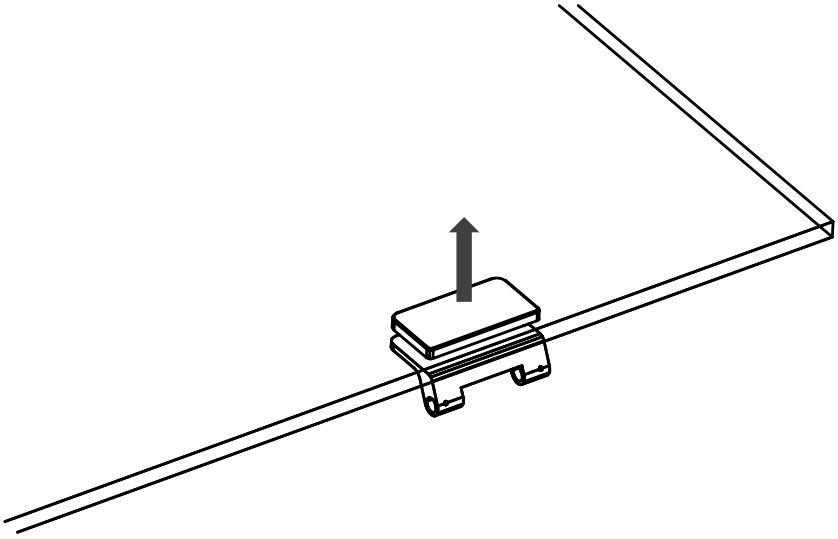

3.

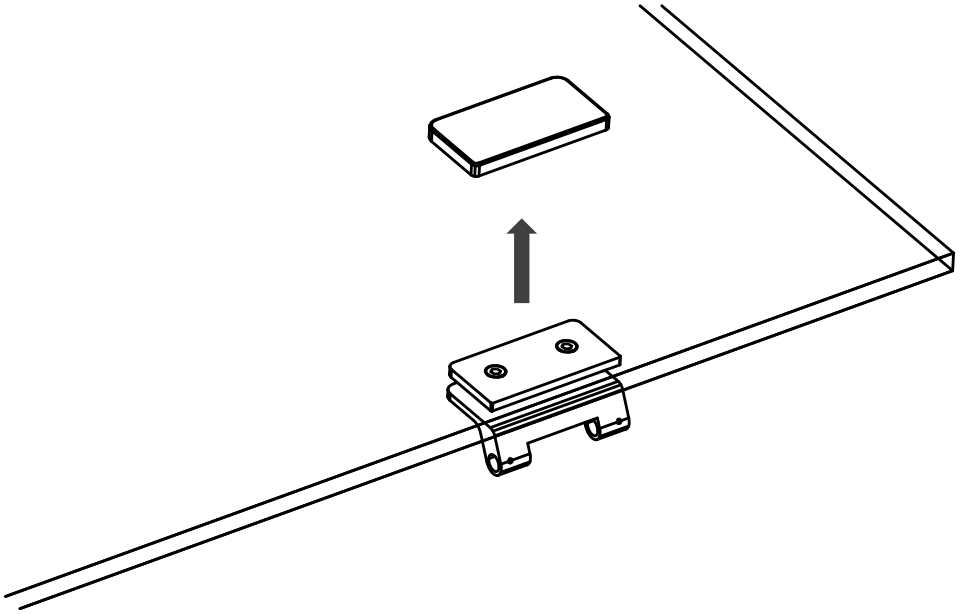

4.

ALLEN KEY
(4 mm)

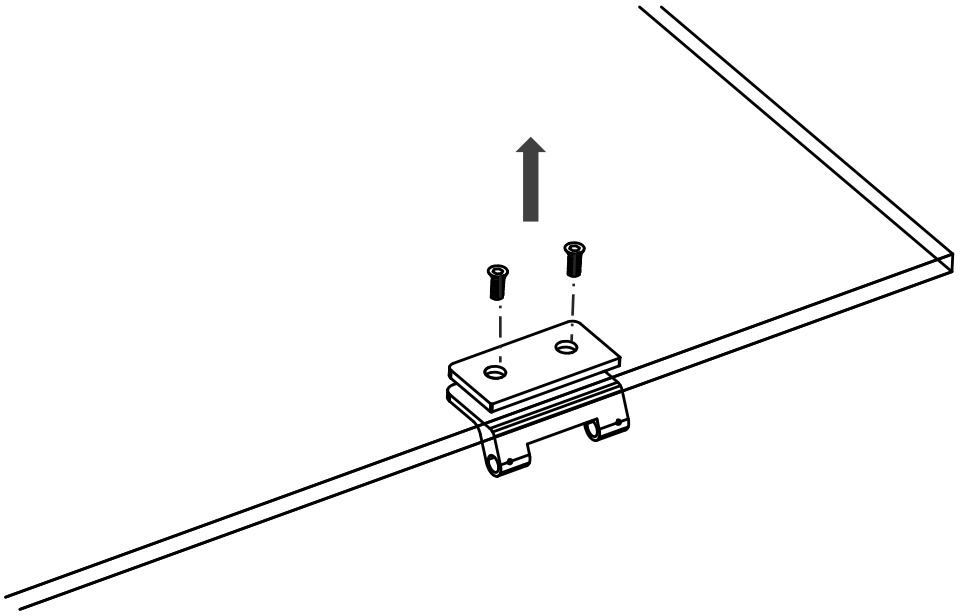

5.

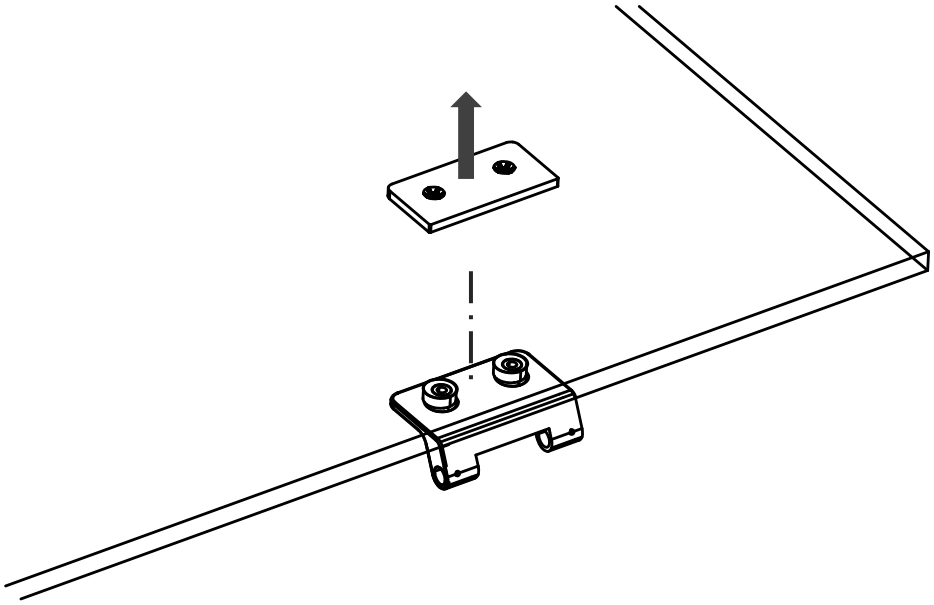

6.

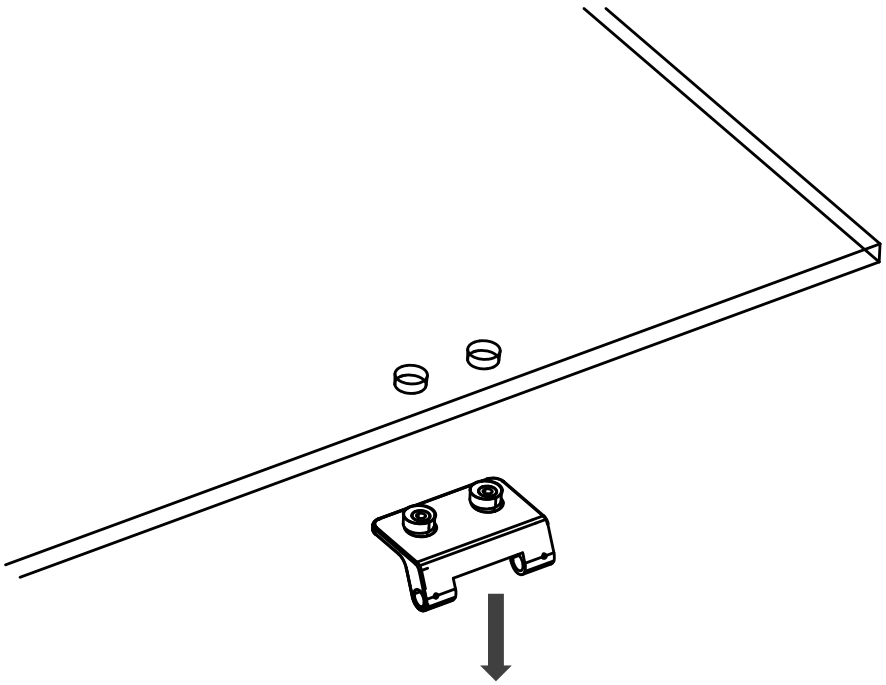

7.

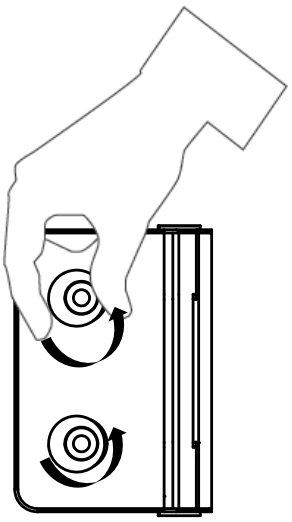

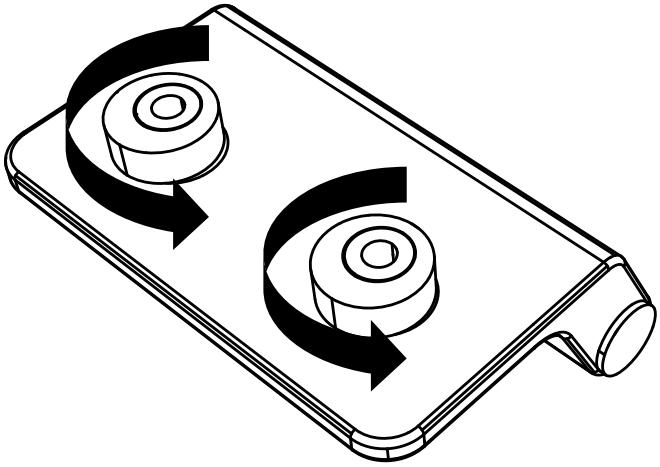

To adjust the hinges; rotate the thick parts and make sure the final position is the same as the image below. Do this for all hinges on the door.

8.

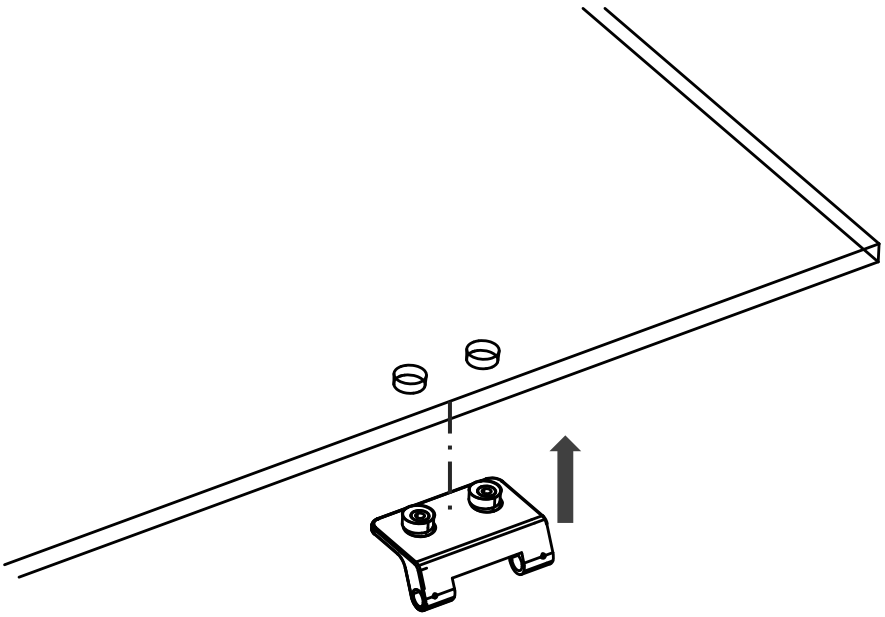

9.

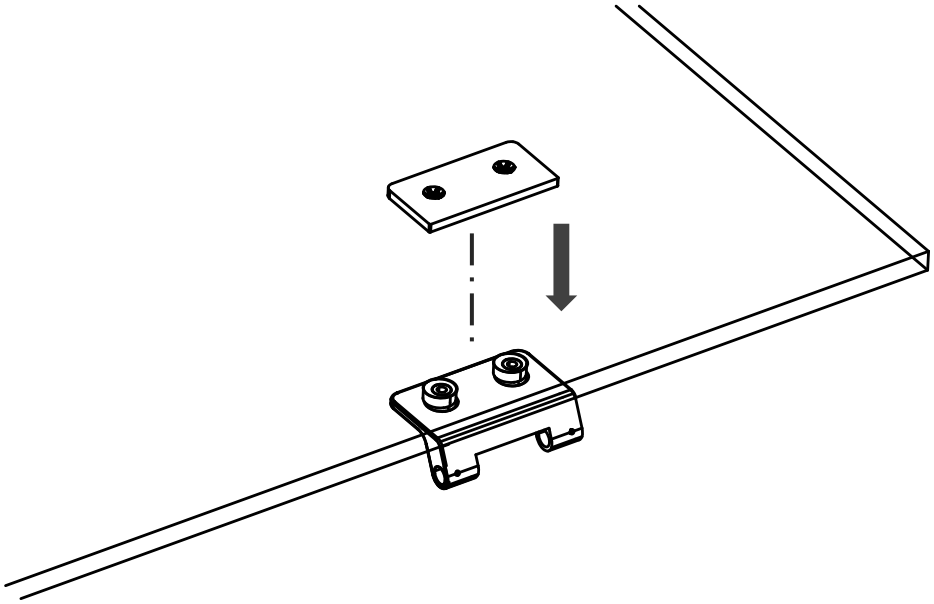

10.

ALLEN KEY
(4 mm)

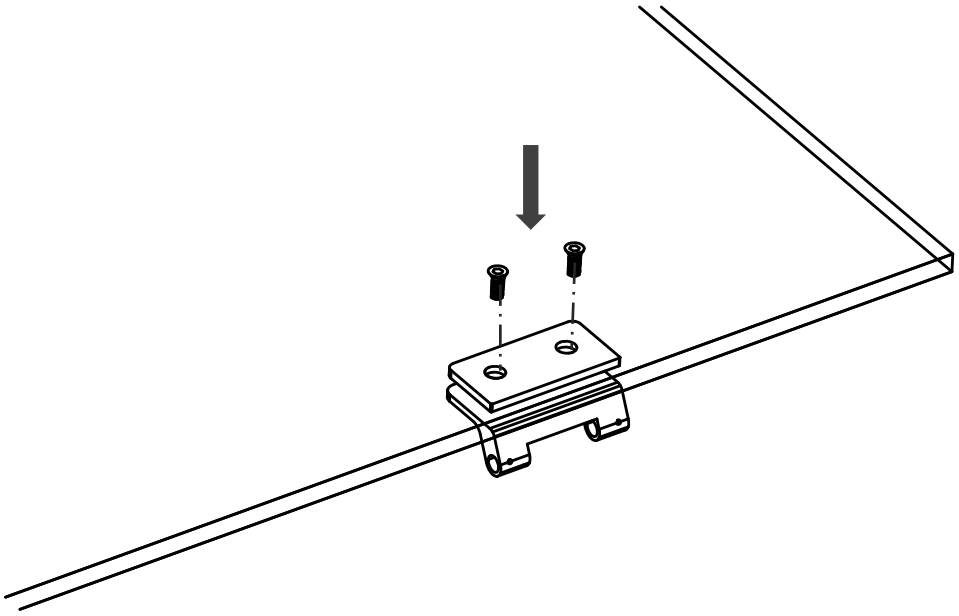

11.

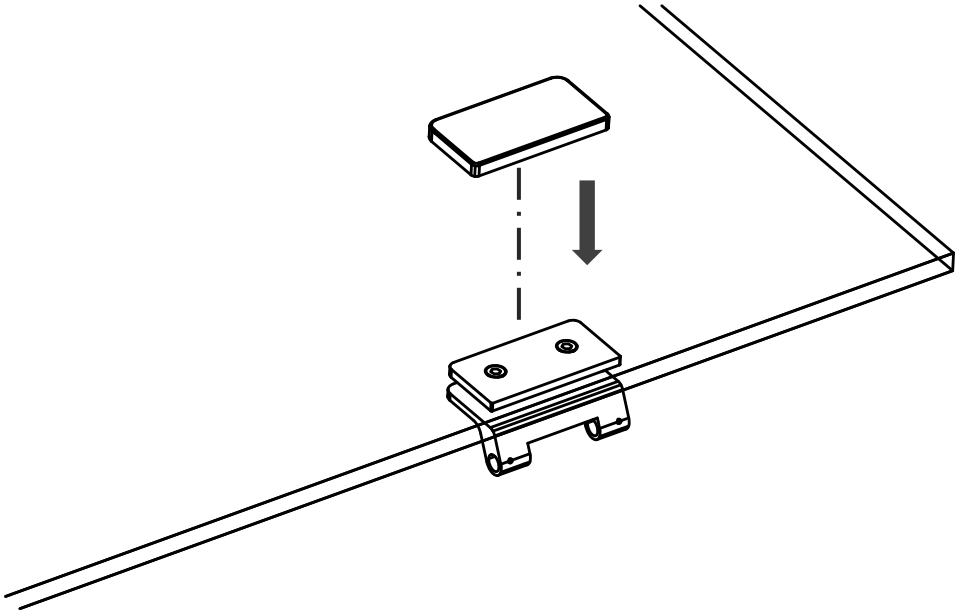

12.

ALLEN KEY
(1 mm)

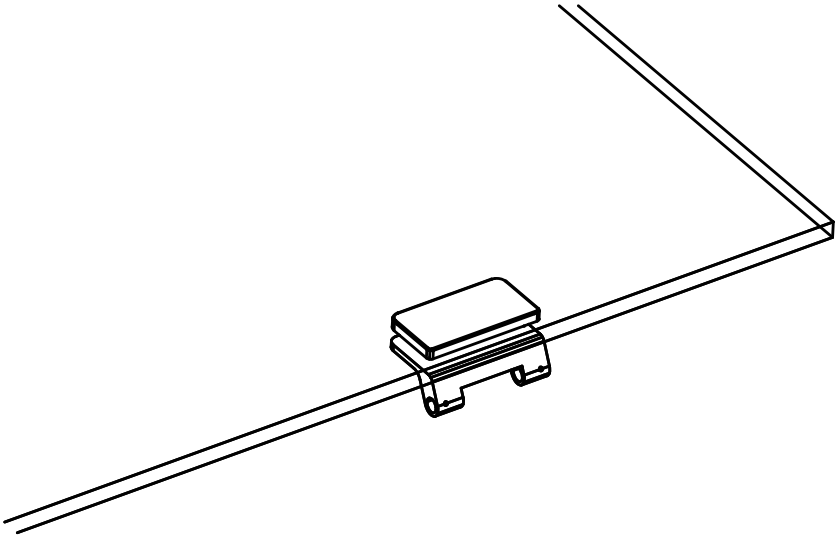

Calma

by nurus

LARGE

Installation Manual
Made in Türkiye